3

scienza & gioco TECNOLOGICA

Laboratorio di MECCANICA

AUTO DA CORSA

Costruzioni da 15 a 20

15-Auto da corsa anni '50
16-Auto da corsa anni '60
17-Auto da corsa anni '80
18-Quad
19-Supercar a guida autonoma
20-Auto supersonica

Manuale da leggere e conservare per future referenze.

Clementoni S.p.A.
Zona Industriale Fontenoce s.n.c.
62019 Recanati (MC) - Italy
Tel.: +39 071 75811
www.clementoni.com

Assistenza clienti
Tel. 02.82.52.52
Email - assistenza@clementoni.it

Clementoni®

1

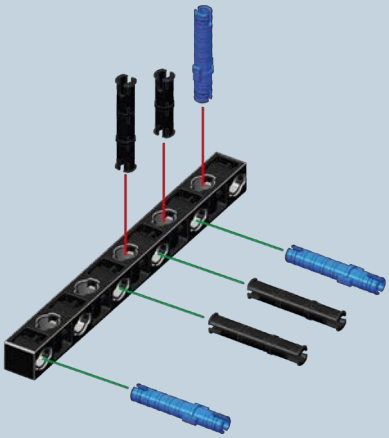

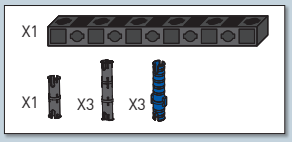

2

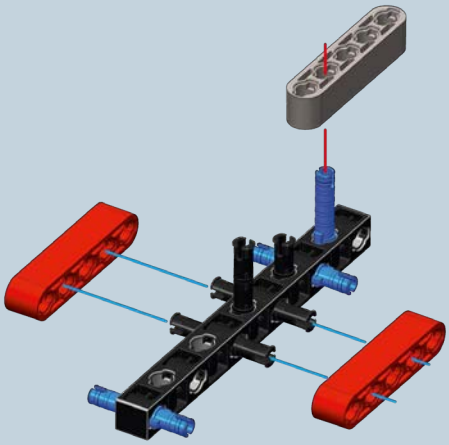

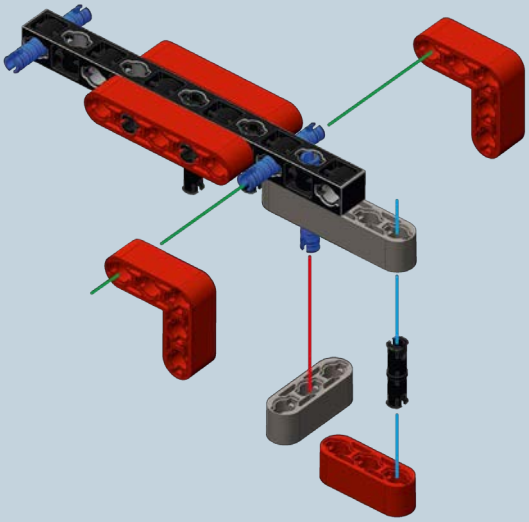

3

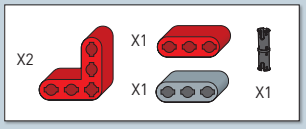

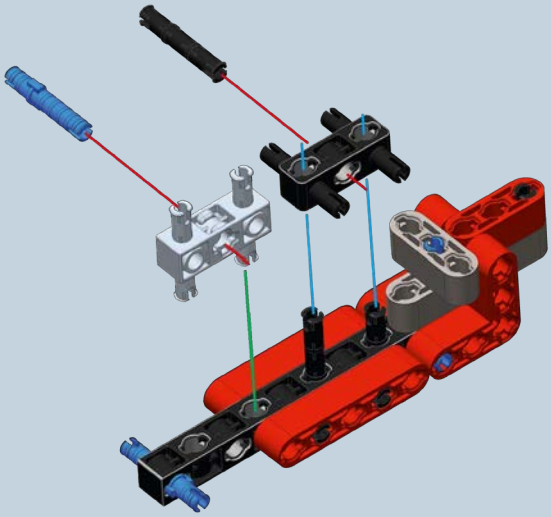

4

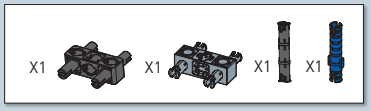

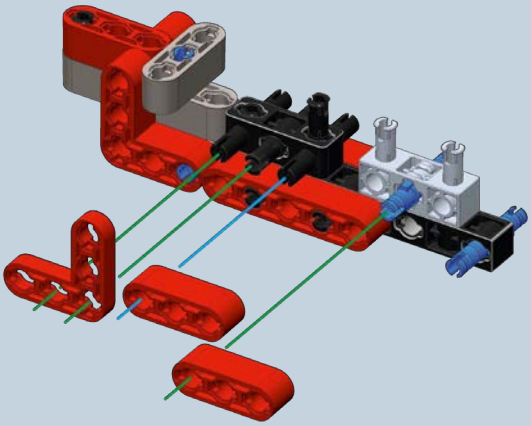

5

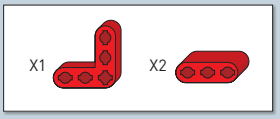

6

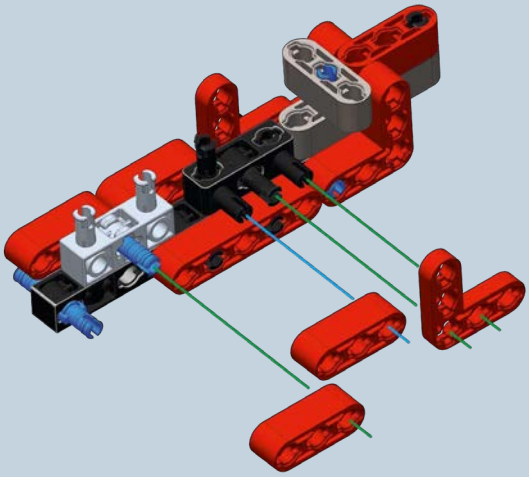

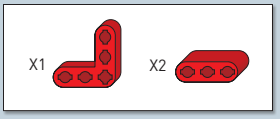

7

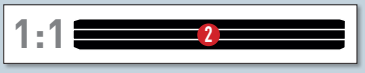

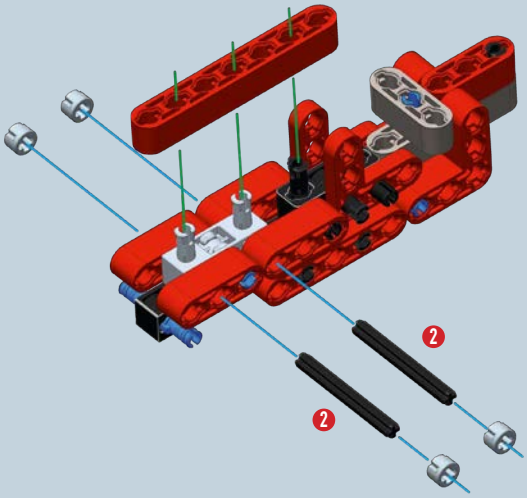

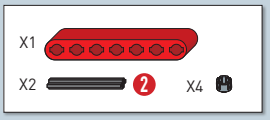

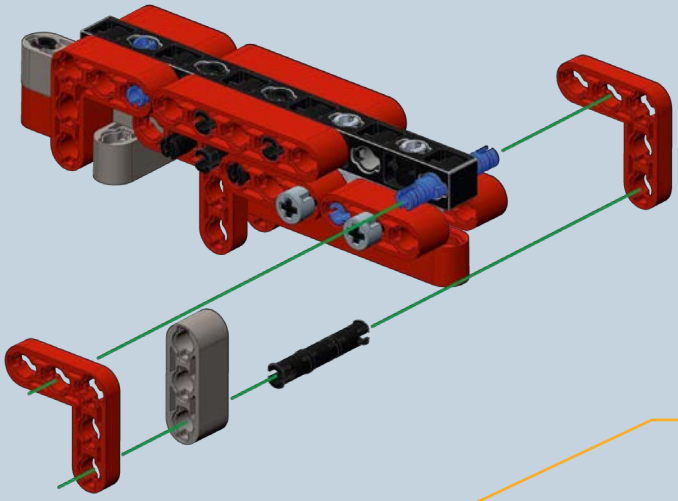

8

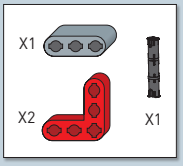

9

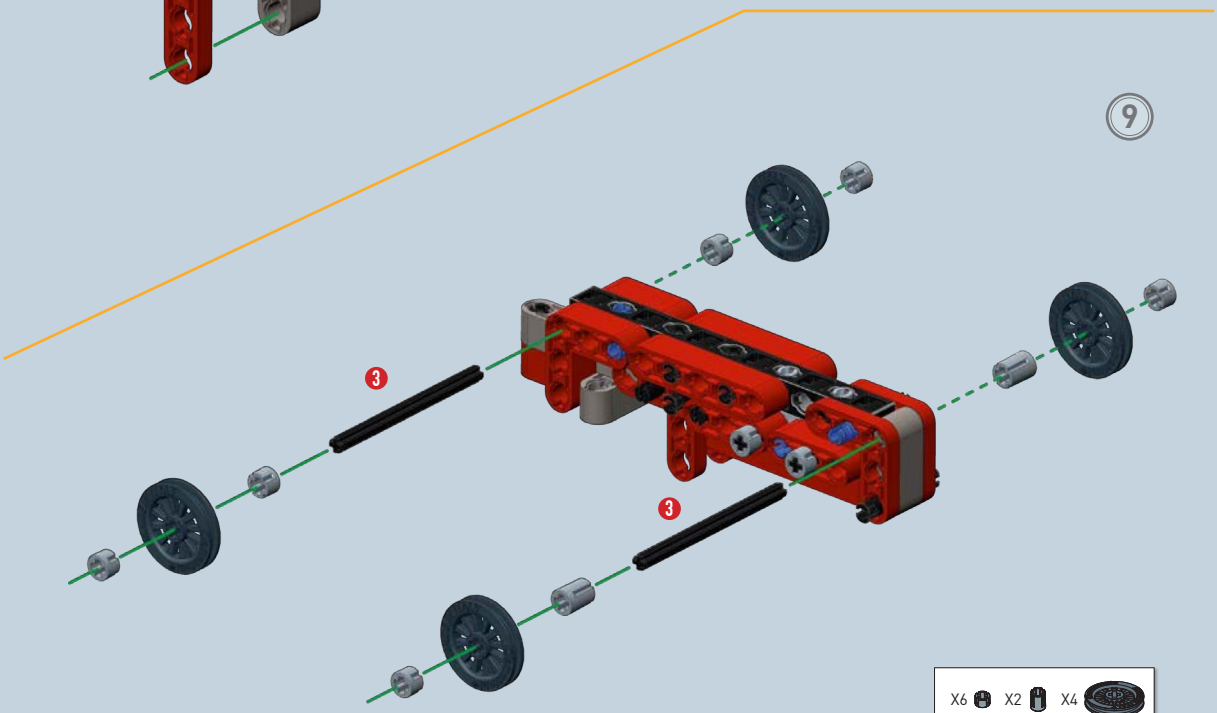

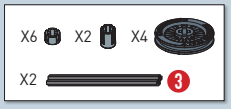

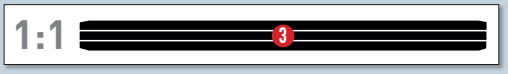

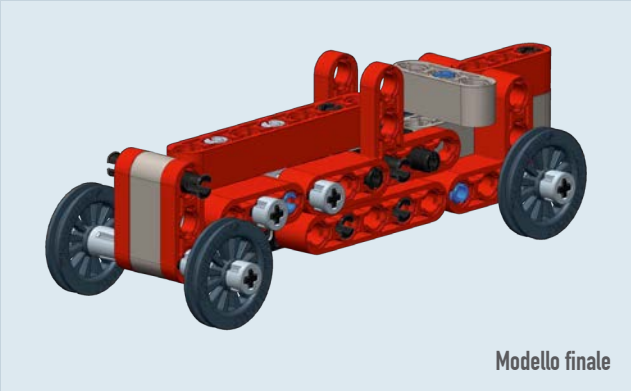

Modello finale

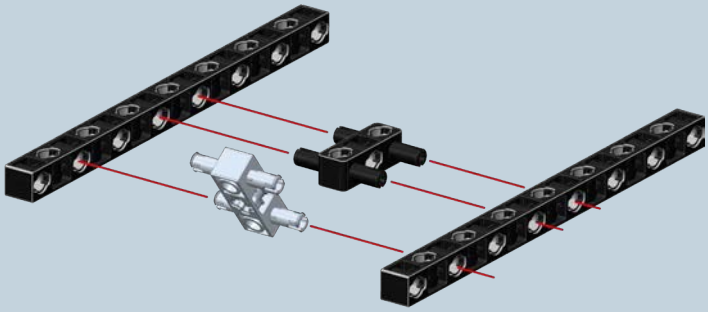

1

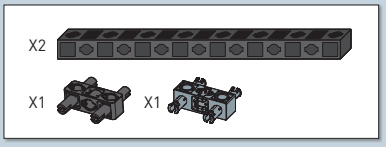

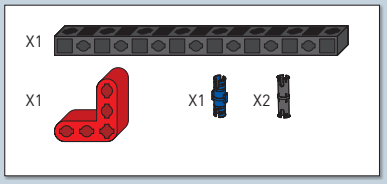

2

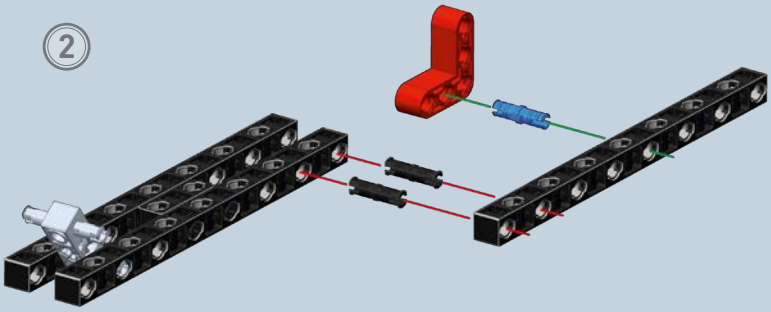

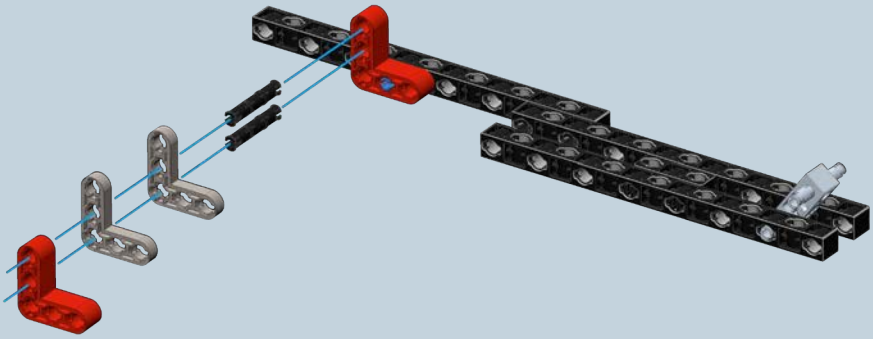

3

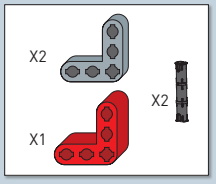

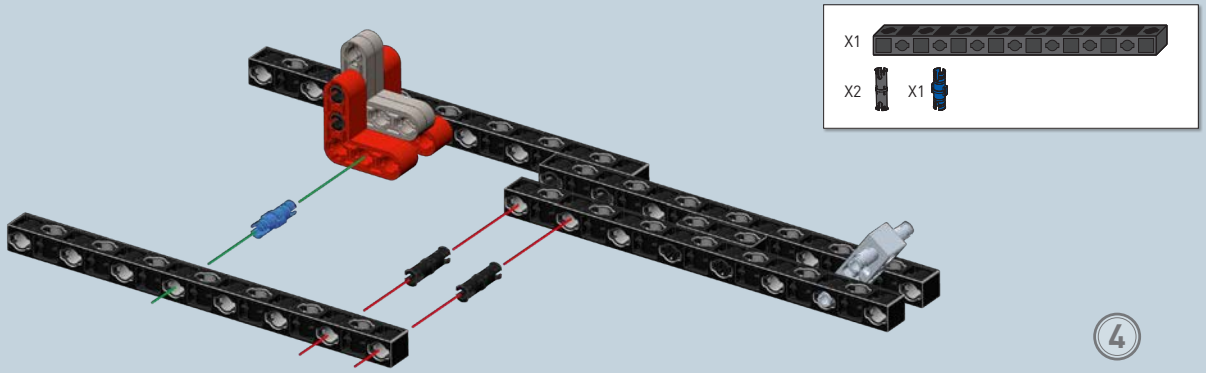
X1
X2
X1
4

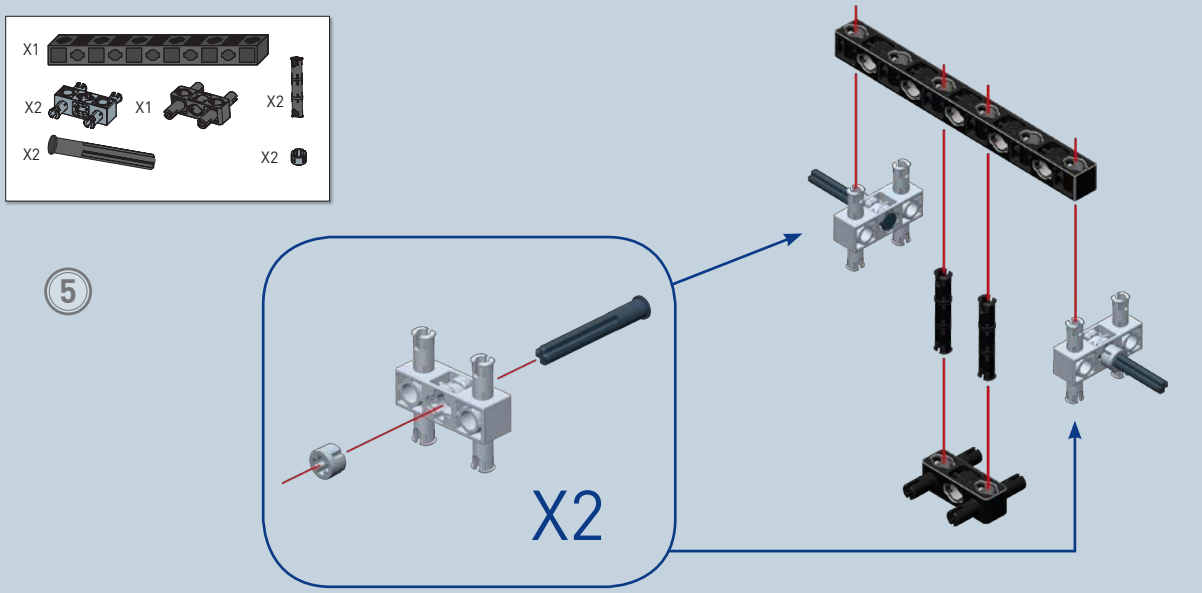
X1
X2
X1
X2
X2
X2
5
X2

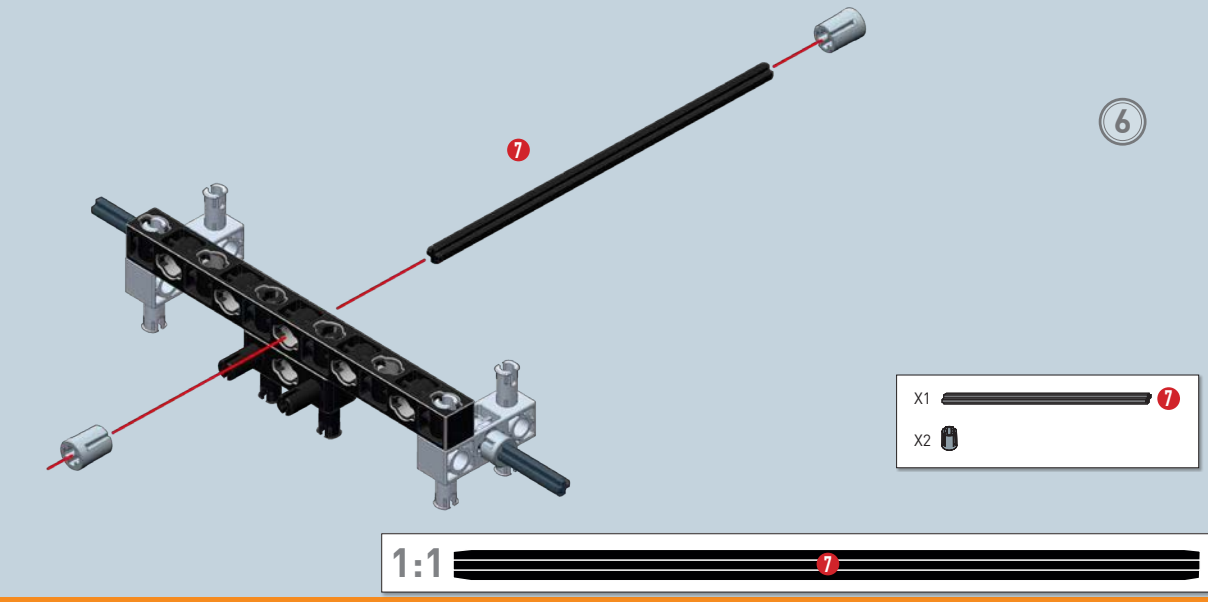
7
6
X1
7
X2
1:1
7

7

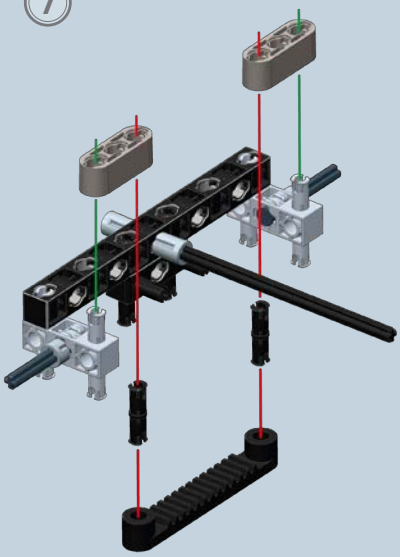

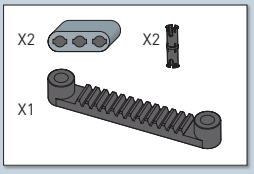

8

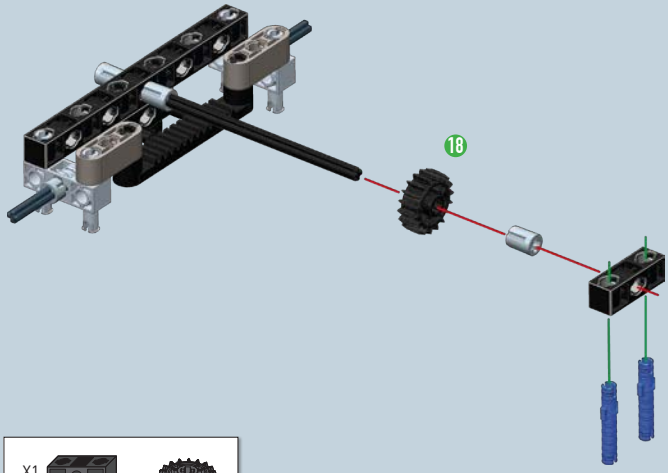

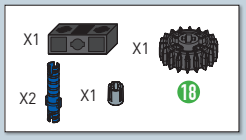

9

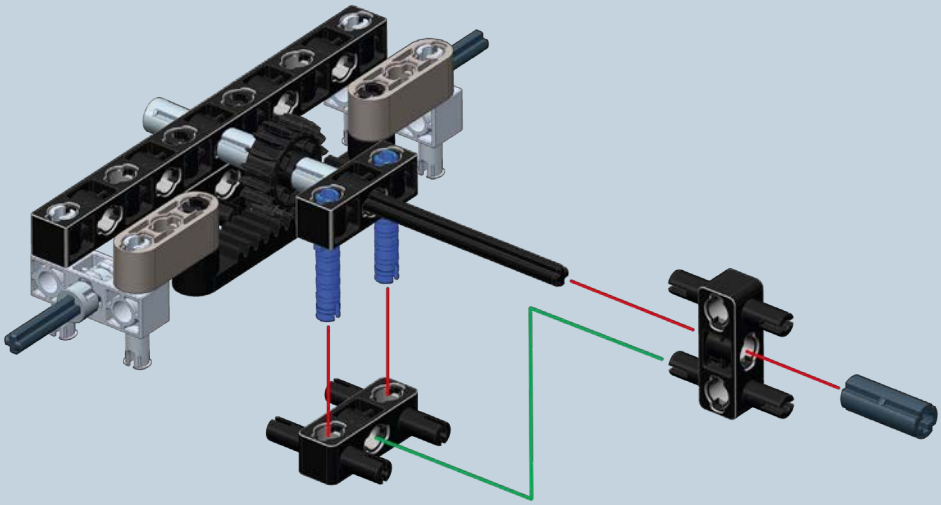

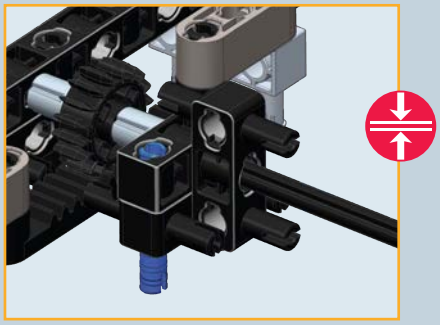

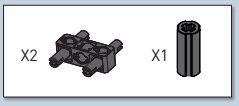

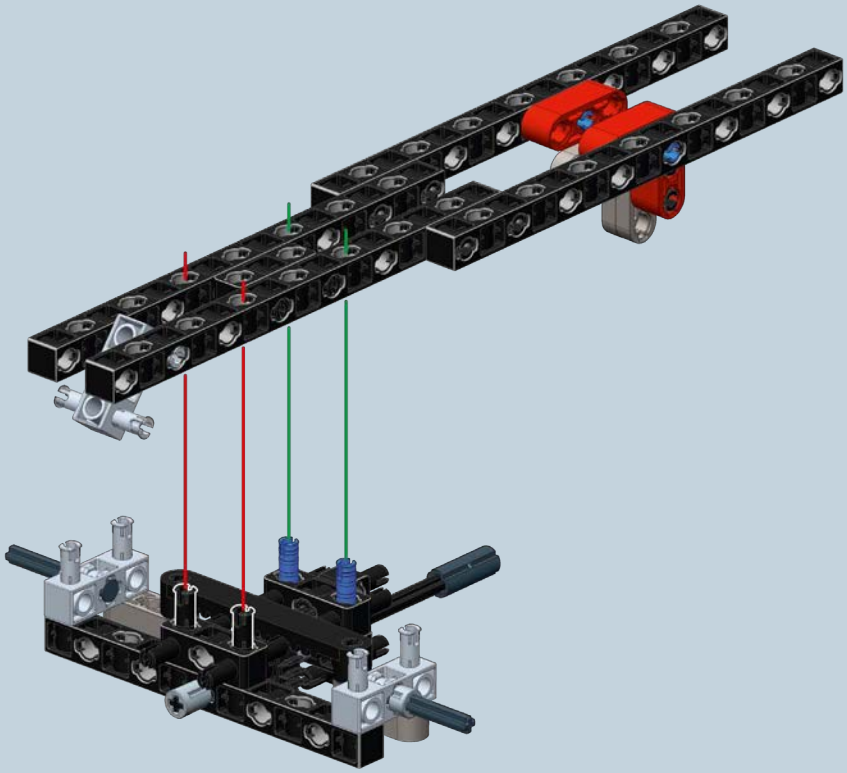

10

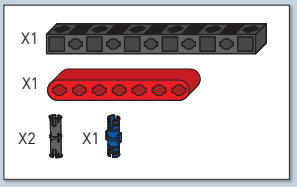

11

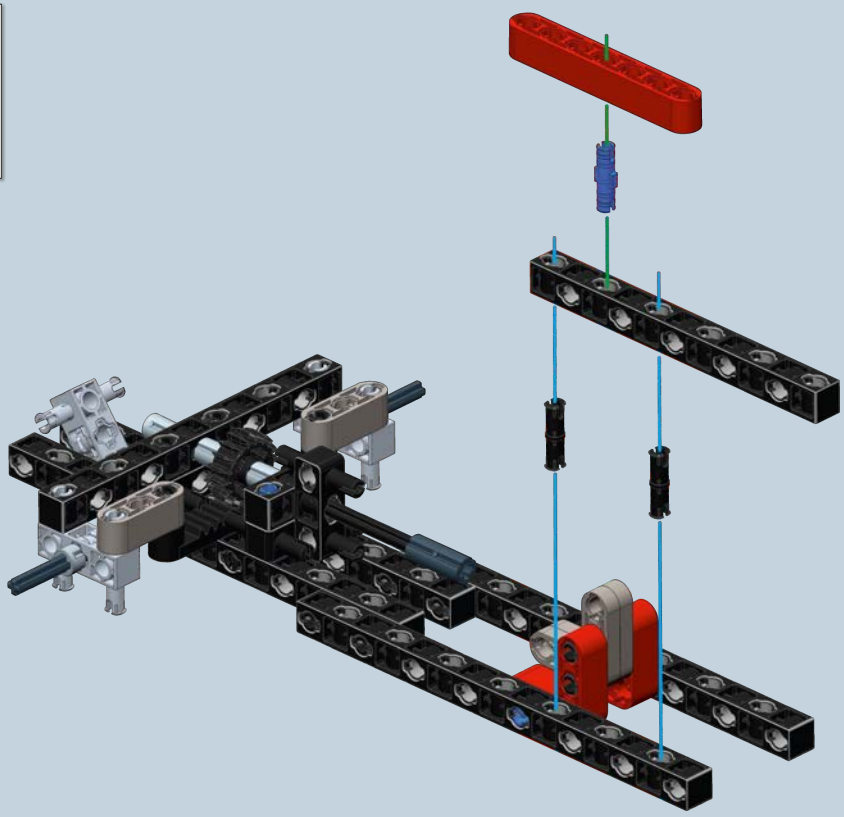

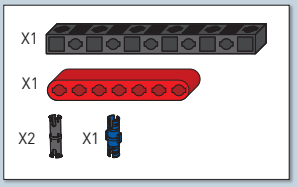

12

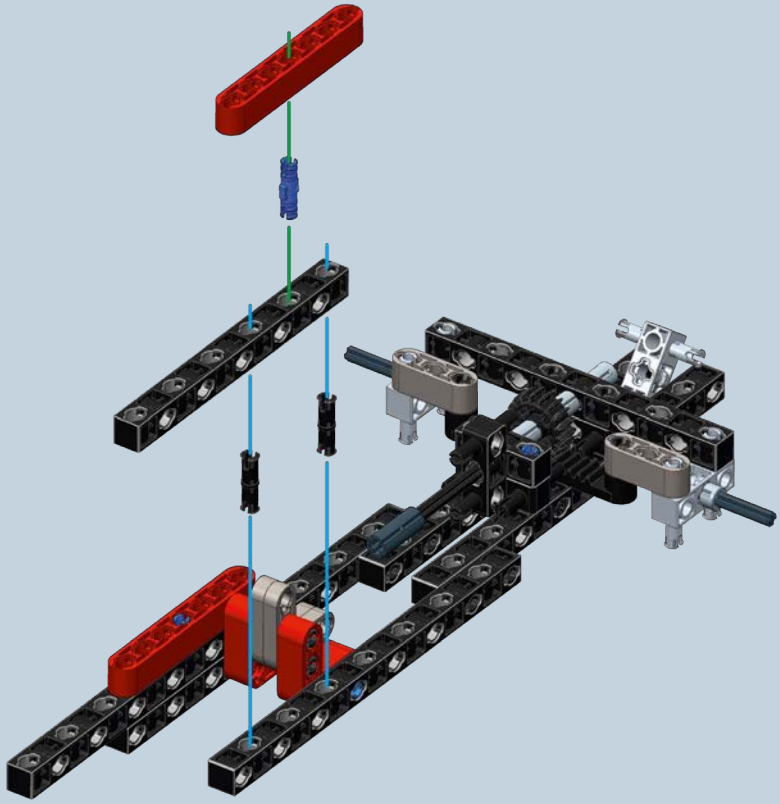

13

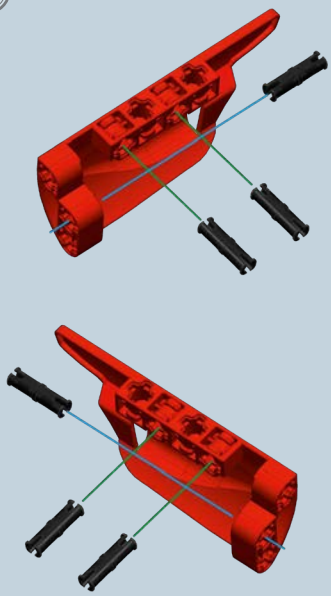

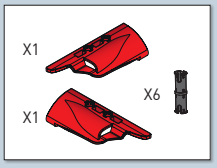

14

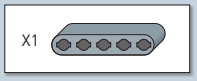

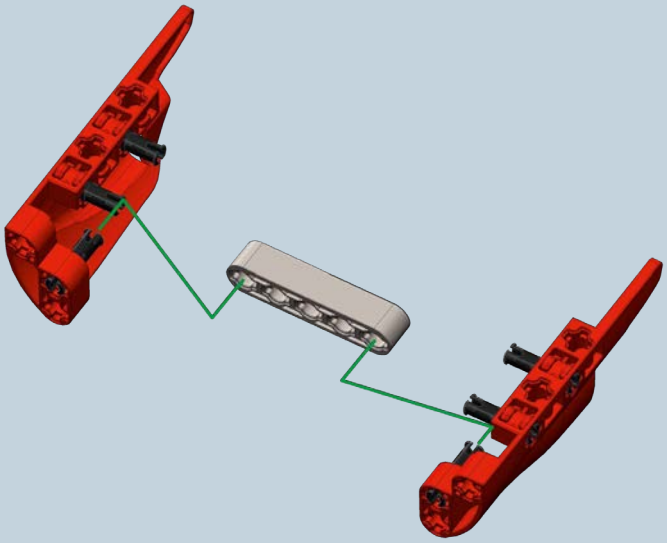

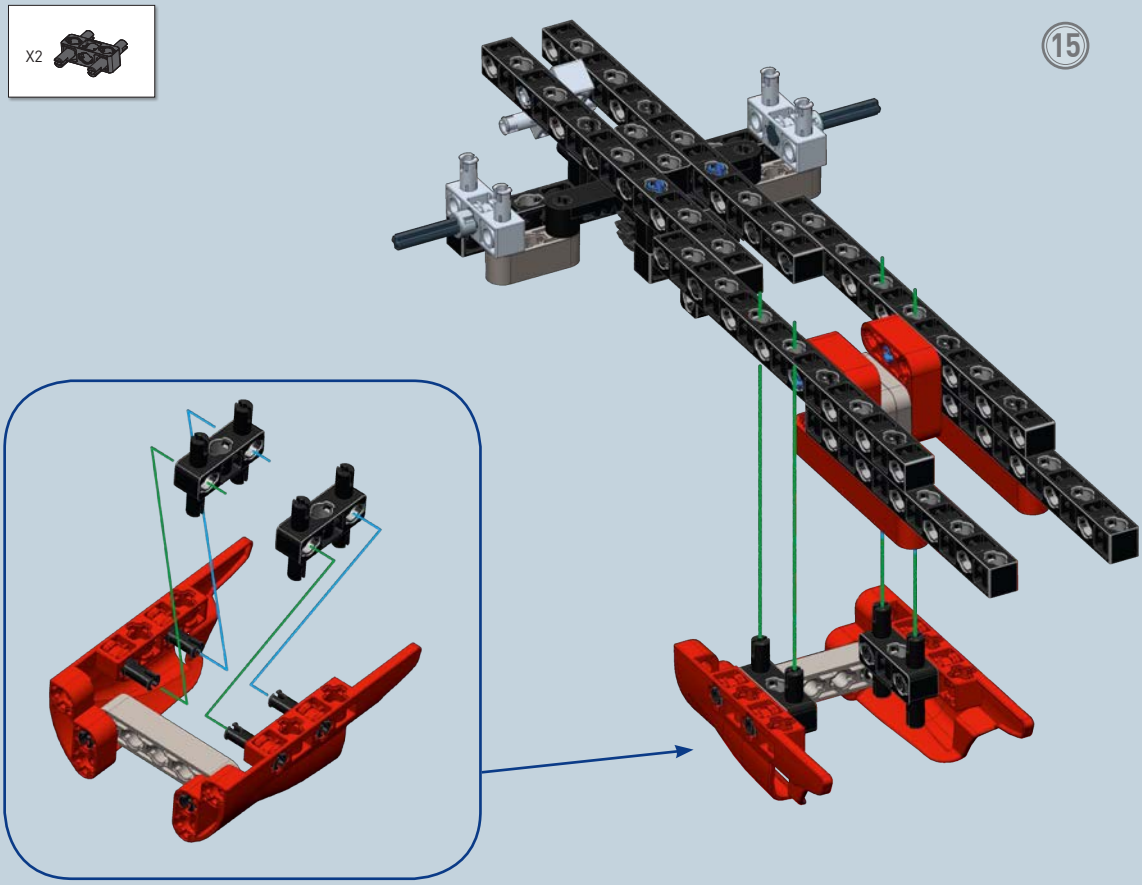
X2
15

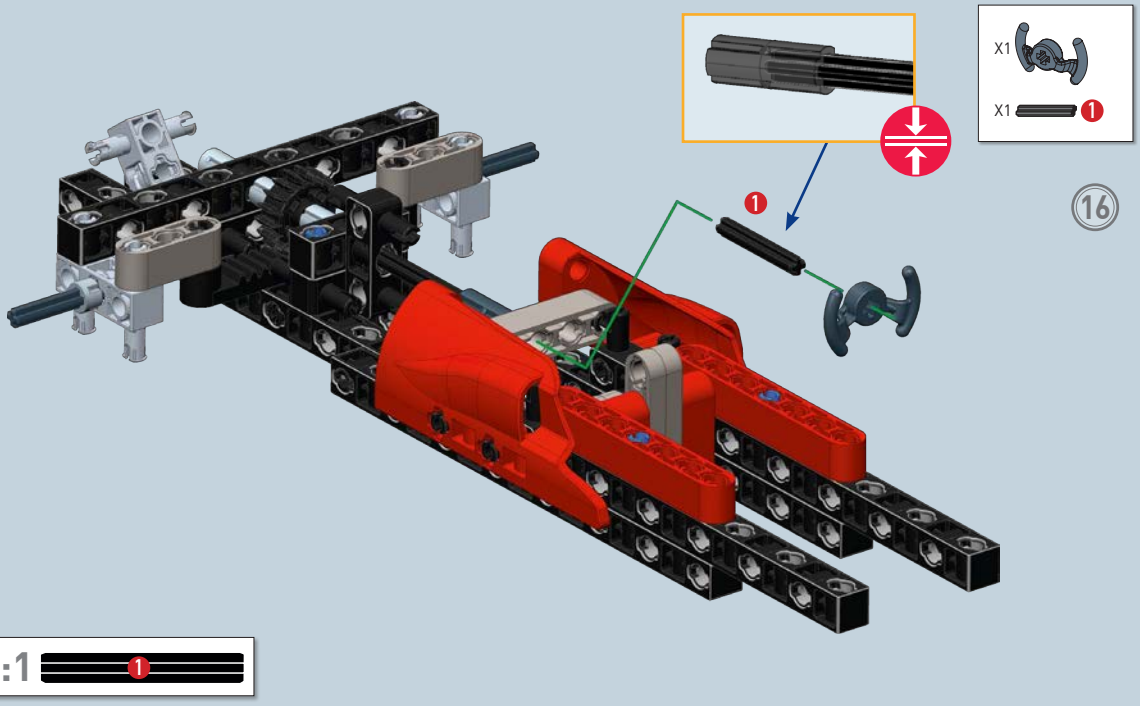
X1
X1
1
16
1
1:1
1

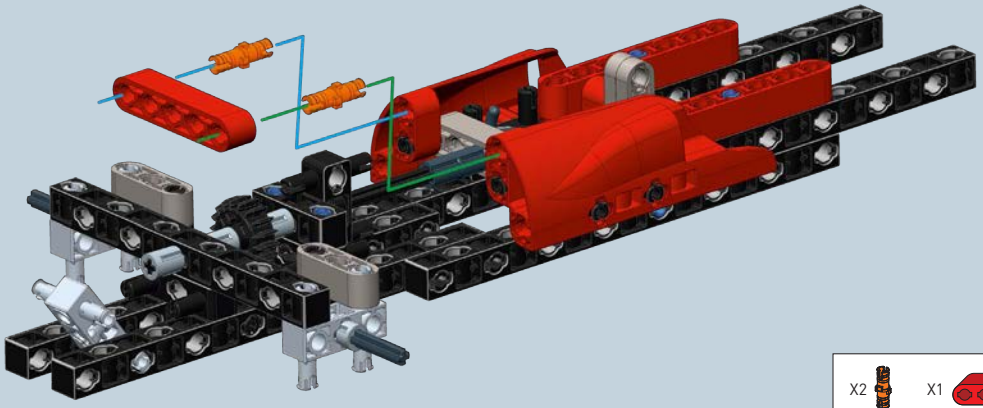

17

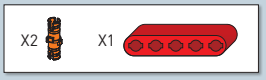

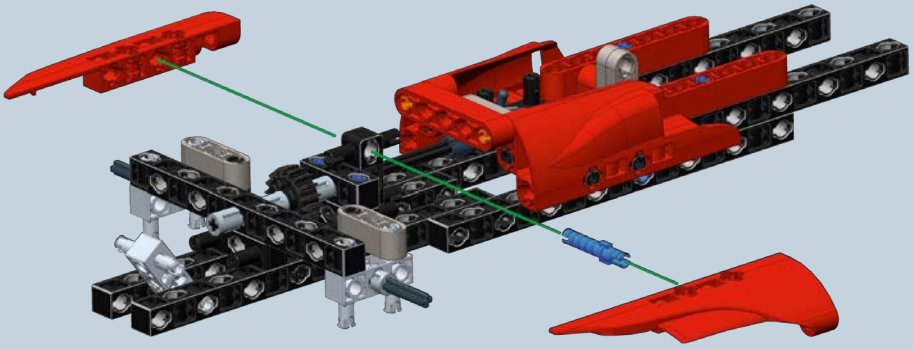

18

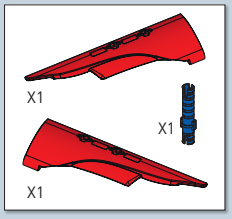

19

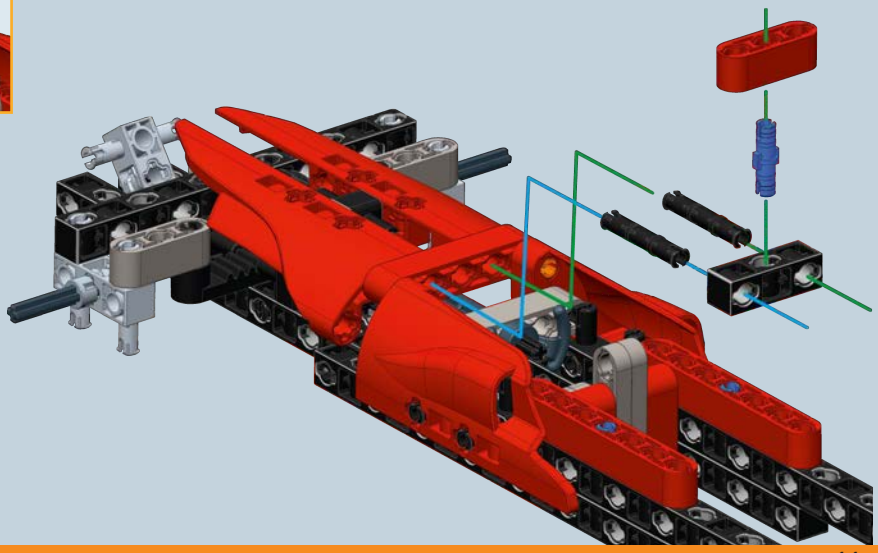

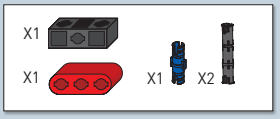

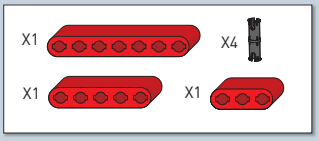

20

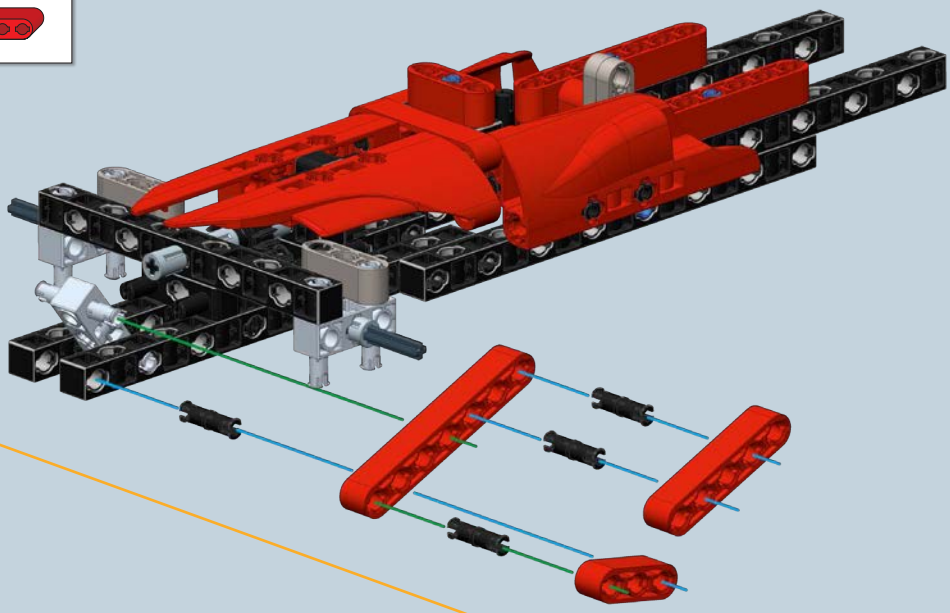

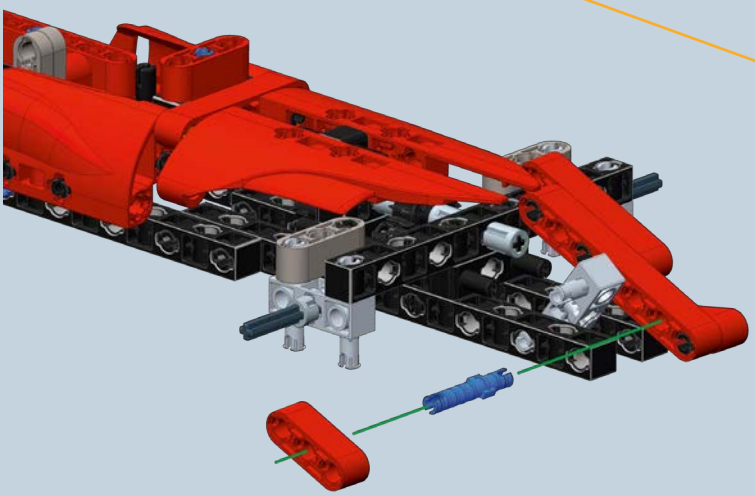

21

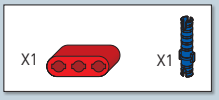

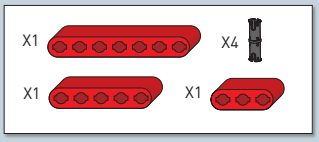

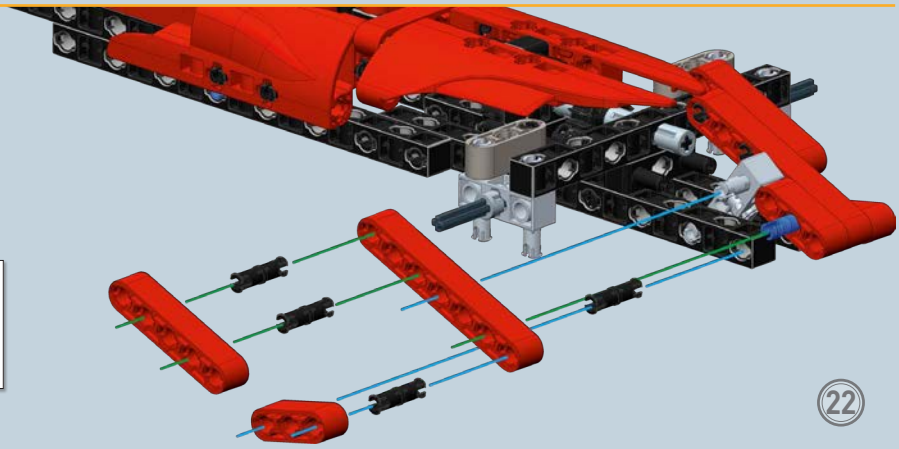

22

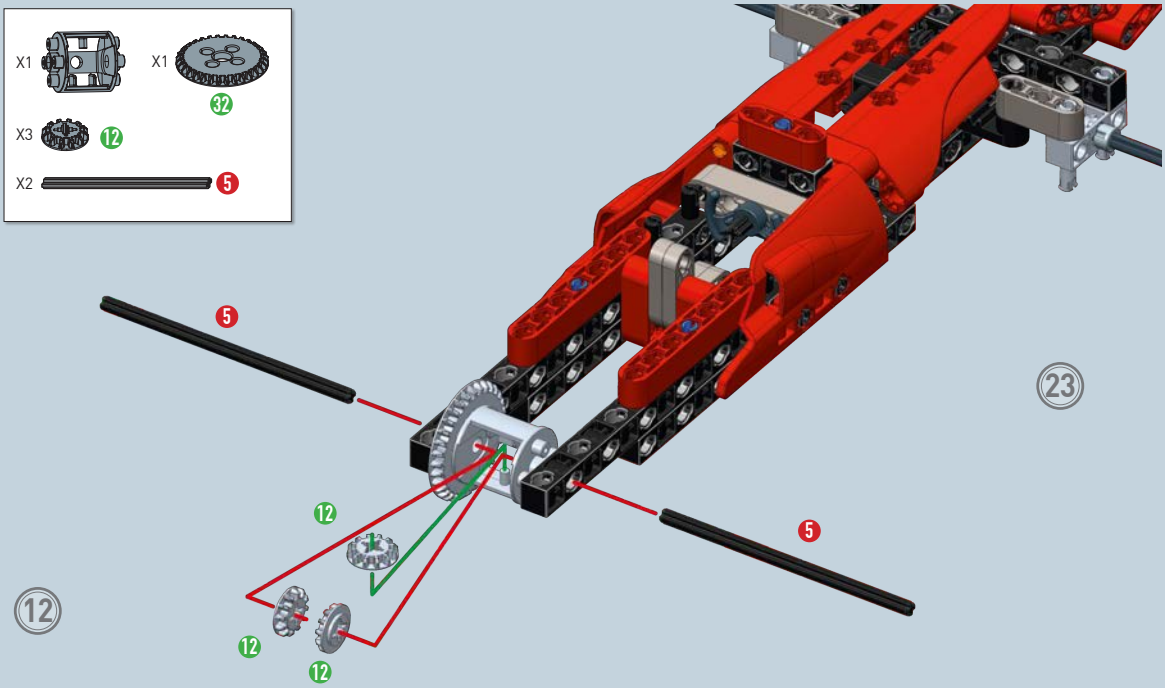
X1
X1
32
X3
12
X2
5
5
12
12
12
5
23
12

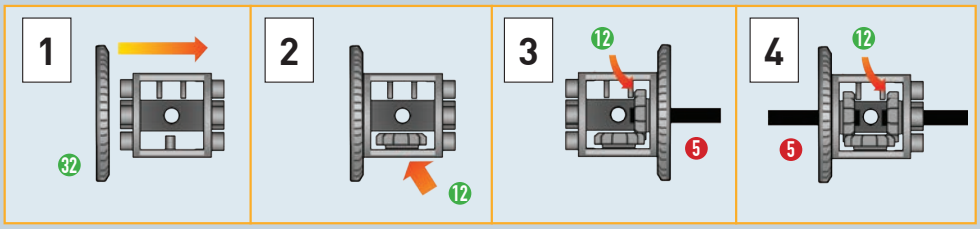
1
32
2
12
3
12
5
4
12
5

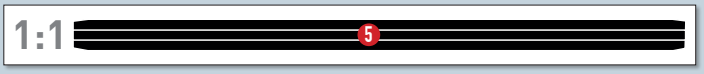
1:1
5

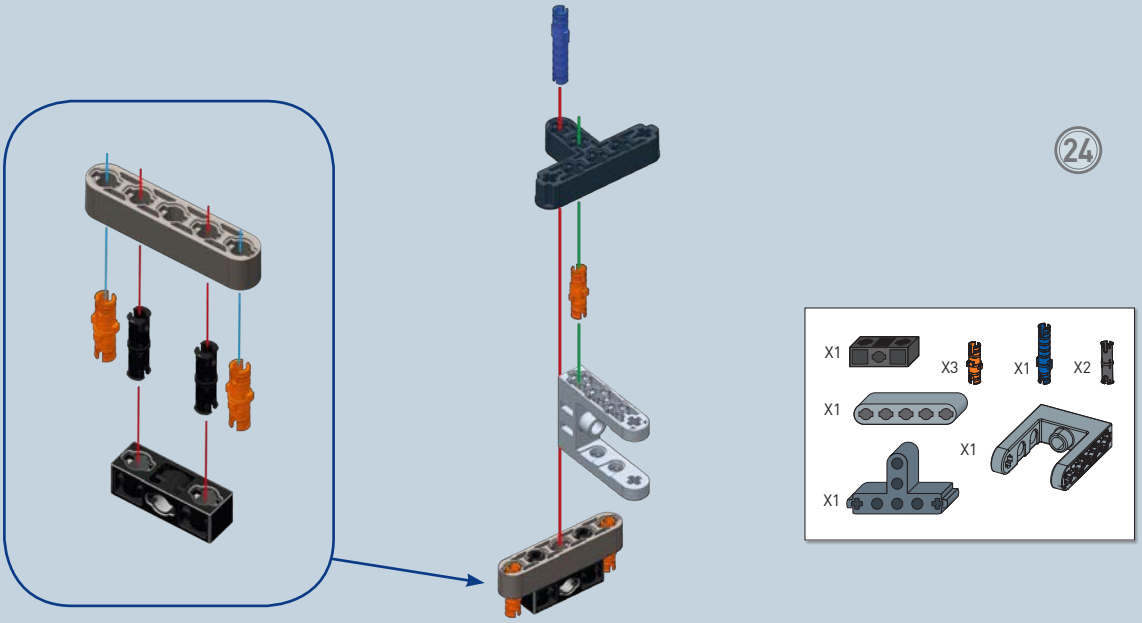
24
X1
X3
X1
X2
X1
X1
X1

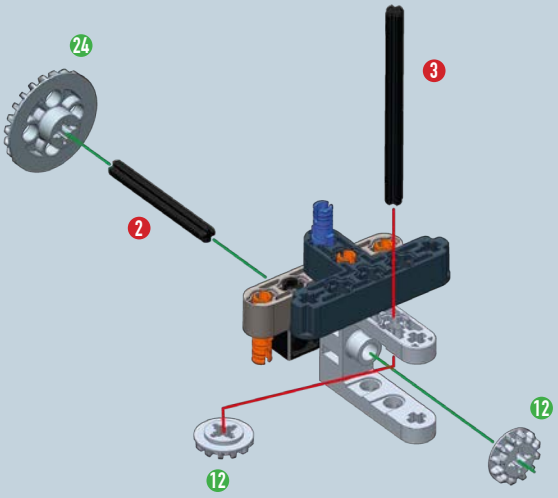
24
3
2
12
12

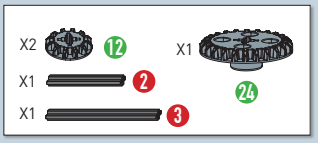
X2
12
X1
2
X1
3
X1
24

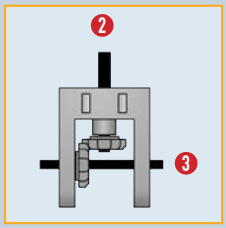
2
3

25

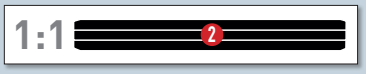
1:1
2

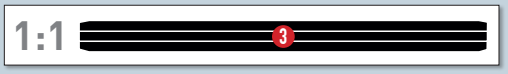
1:1
3

26

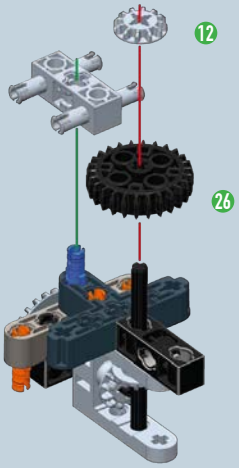
12
26

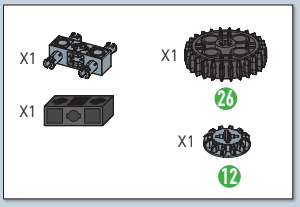
X1
X1
X1
26
X1
12

27

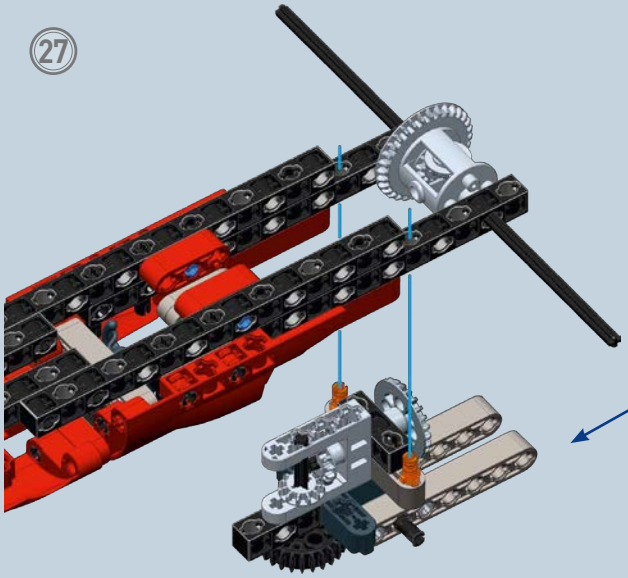

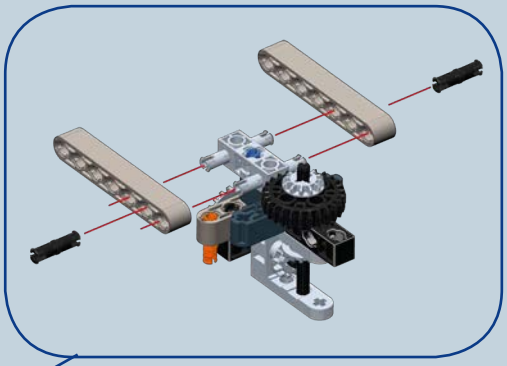

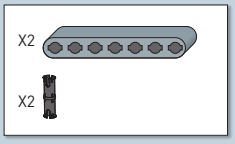
X2
X2

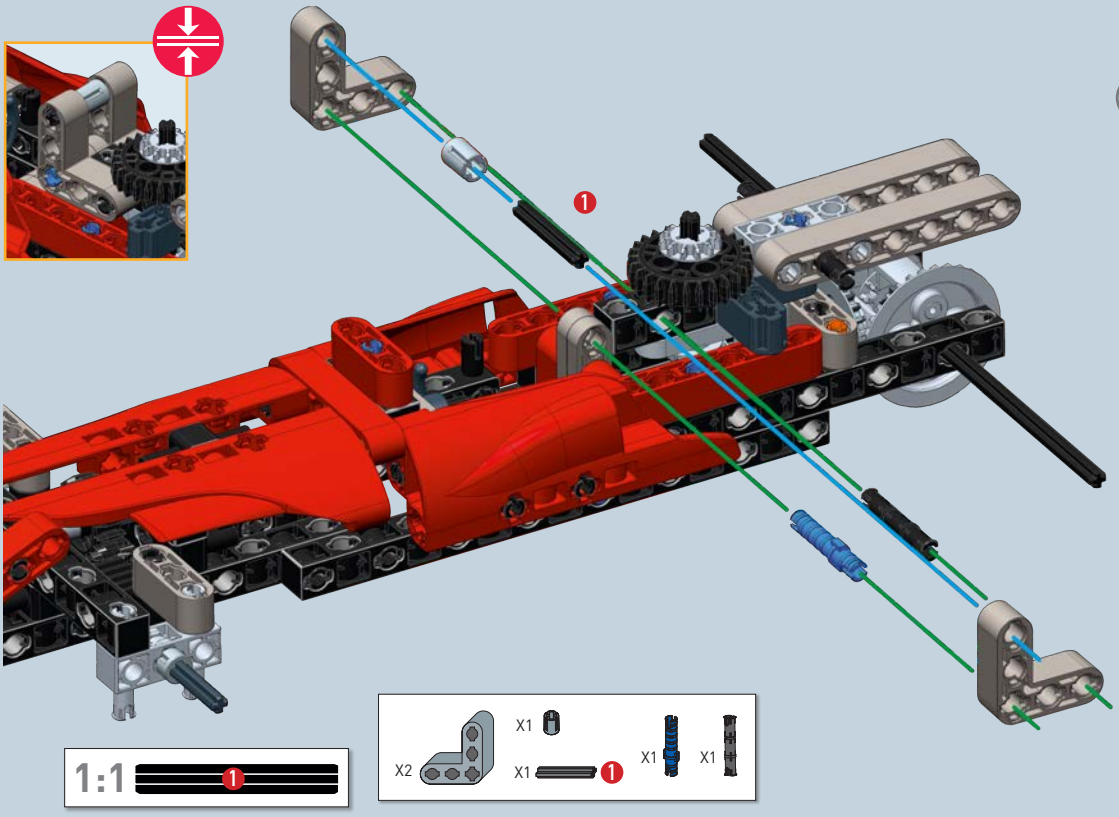
28
1
1:1
1
X2
X1
X1
1
X1
X1

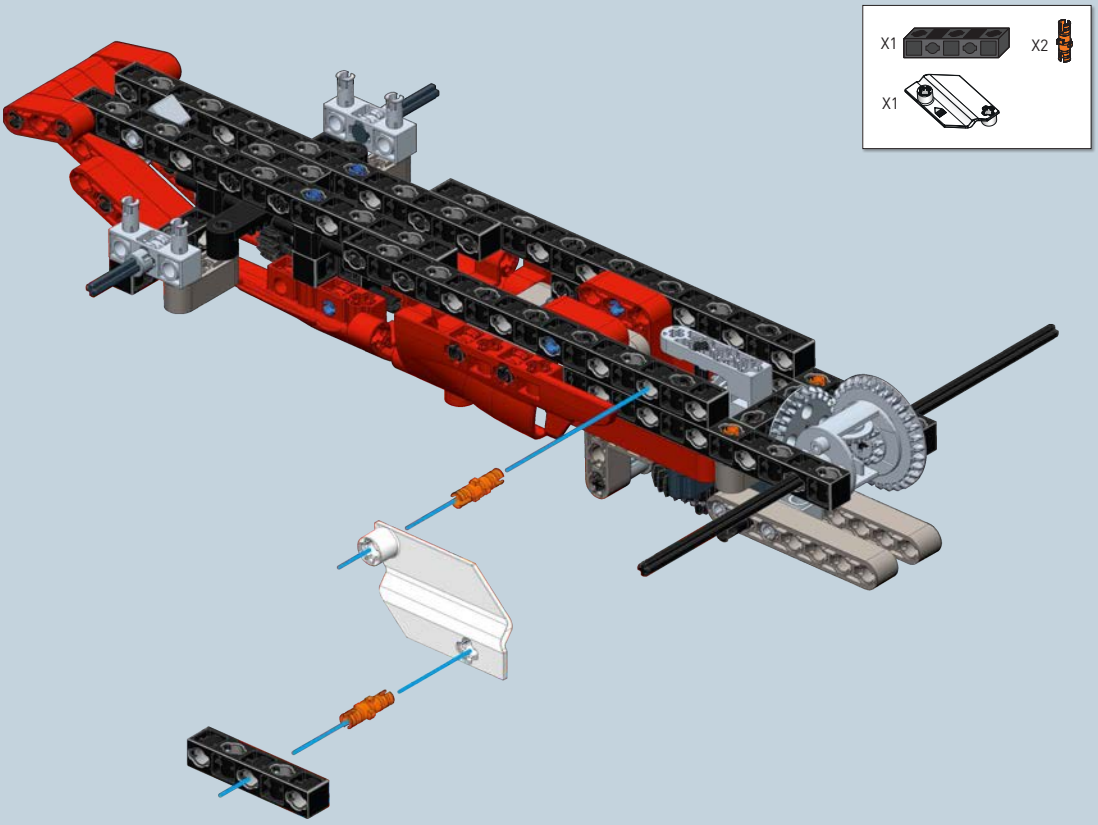
X1
X2
X1
29

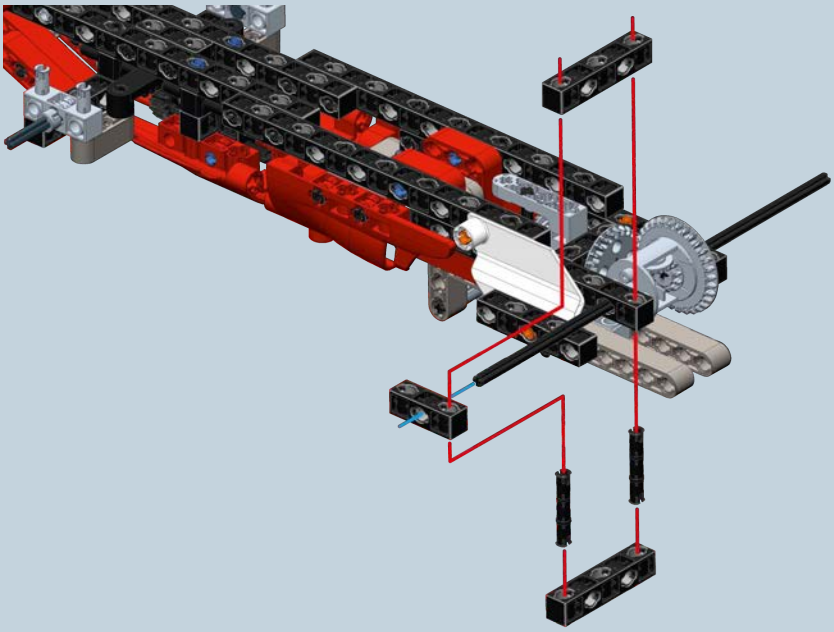

30

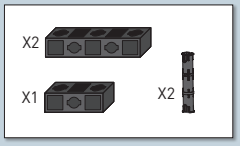

31

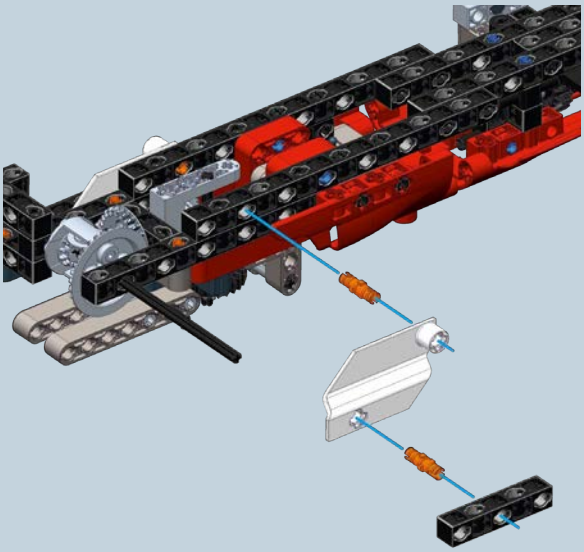

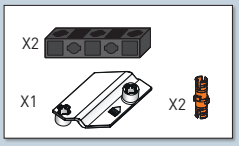

32

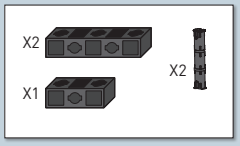

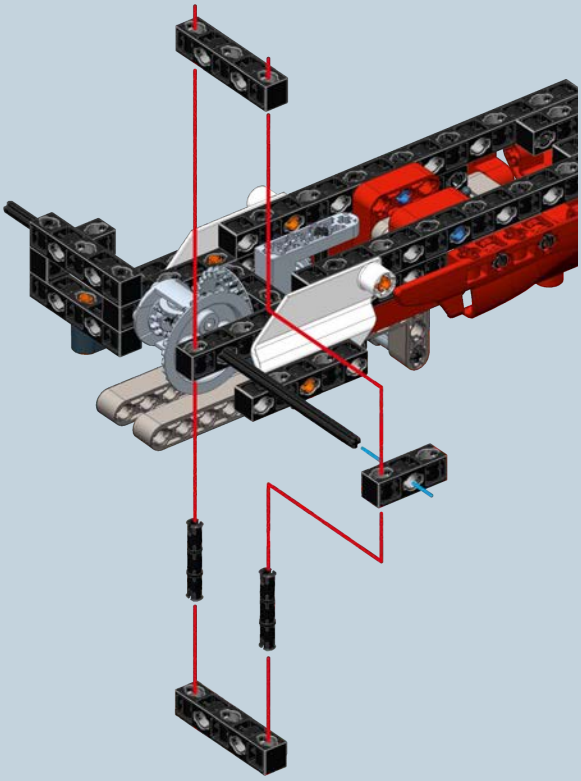

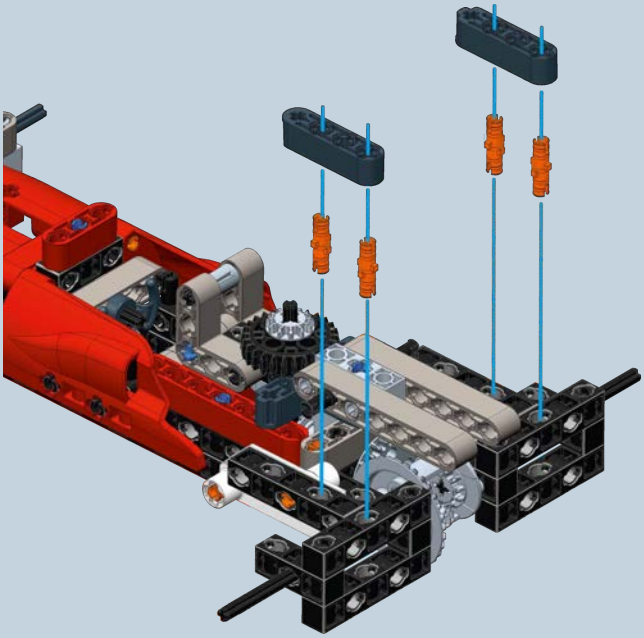

33

34

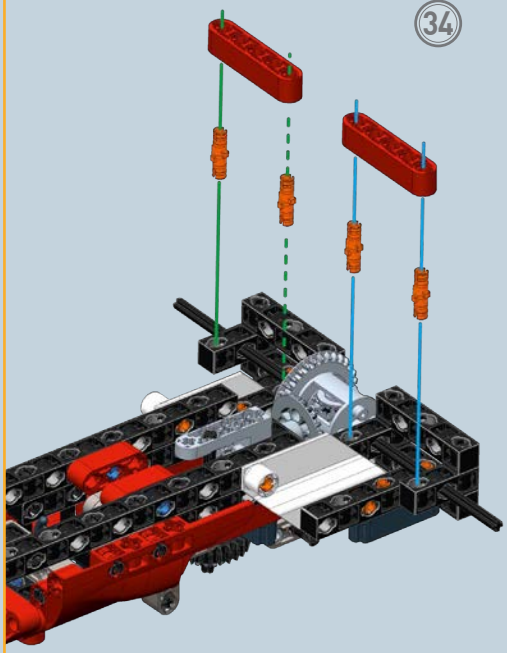

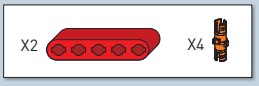

35

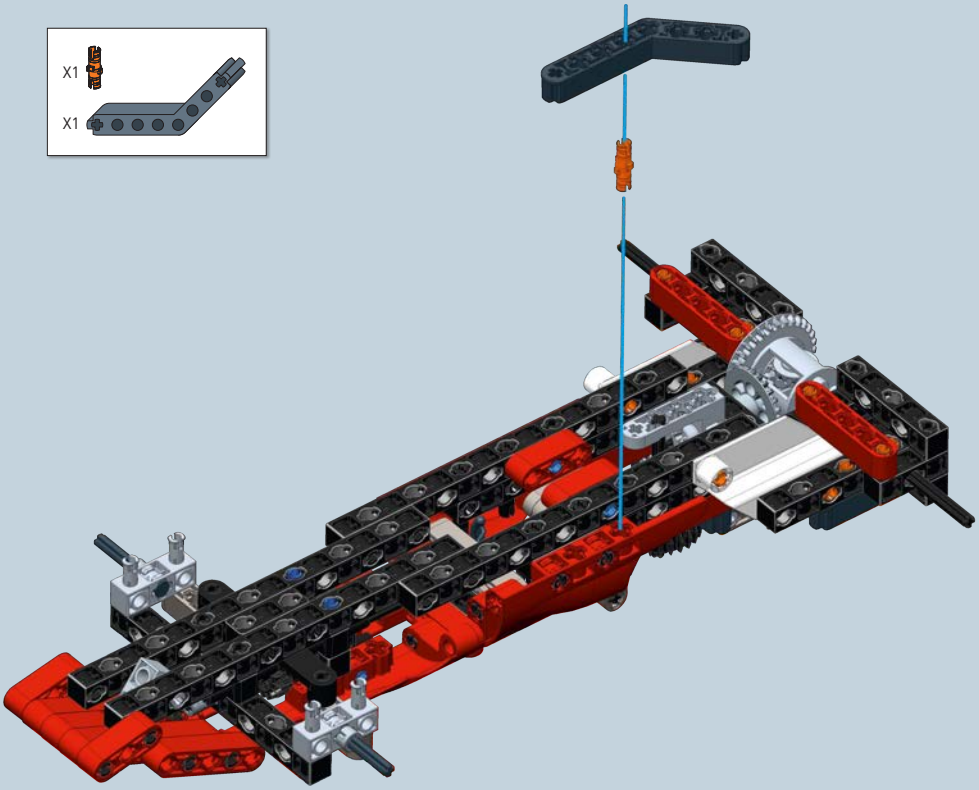

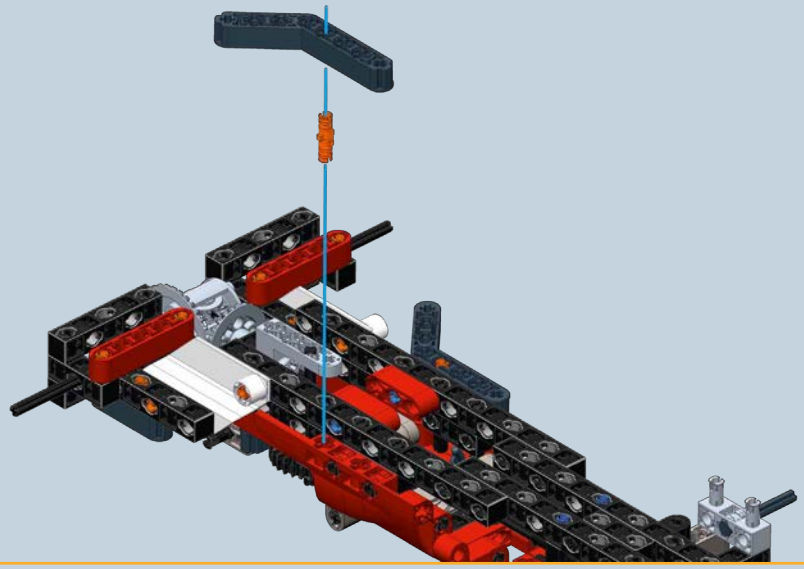

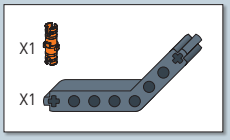

36

37

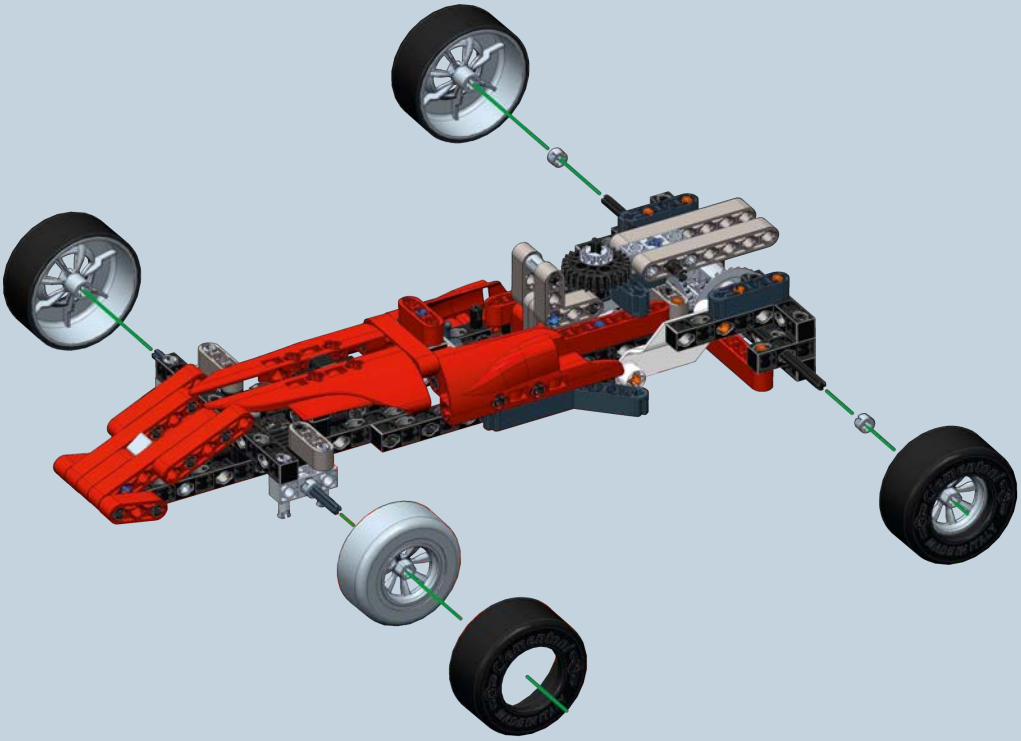

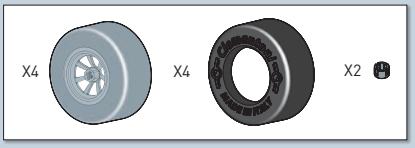

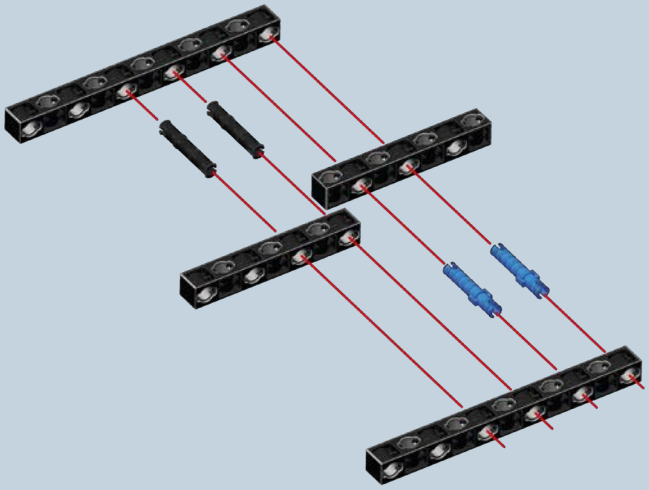

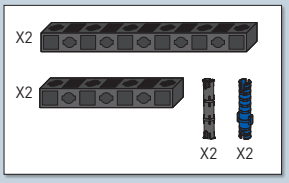

1

2

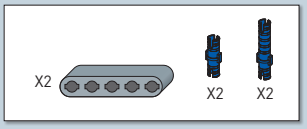

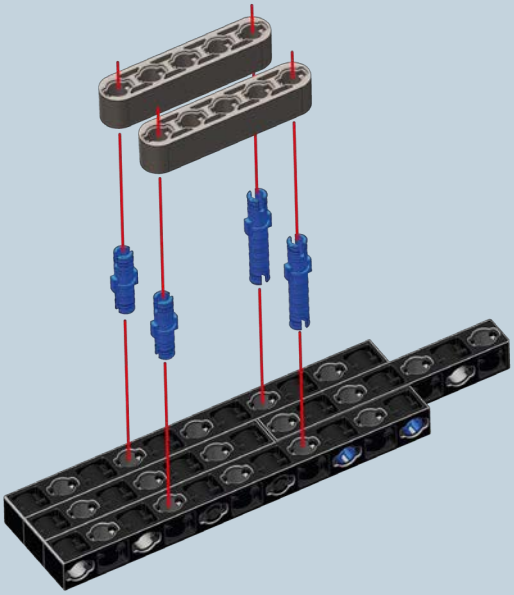

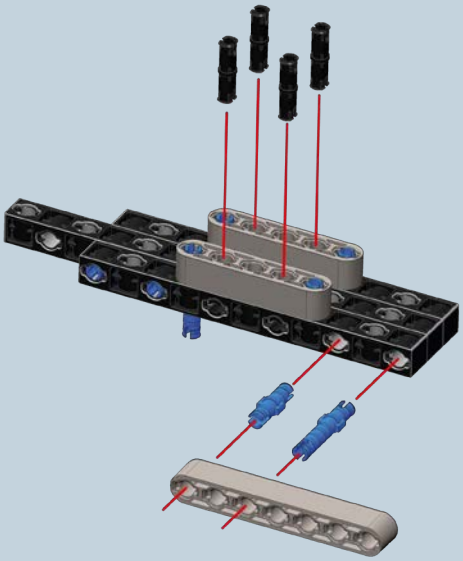

3

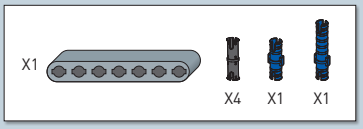

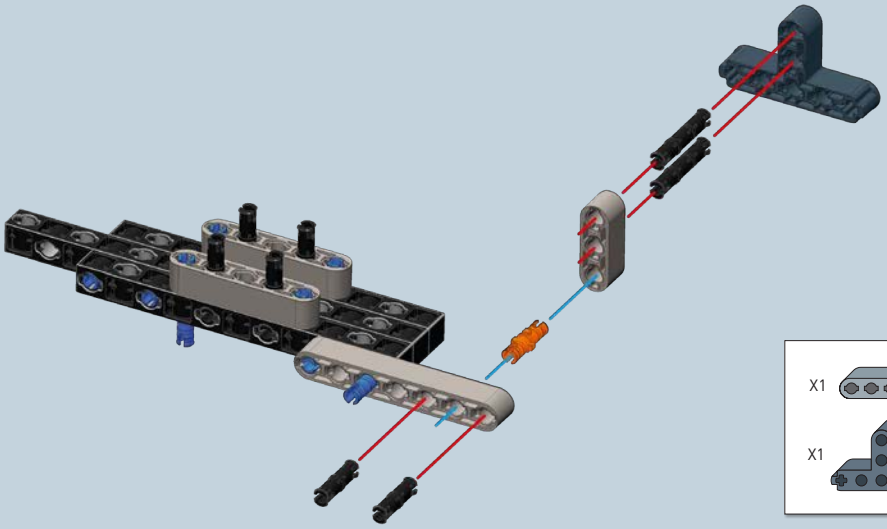

4

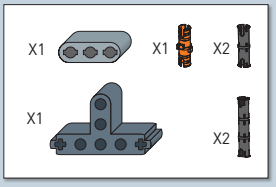

5

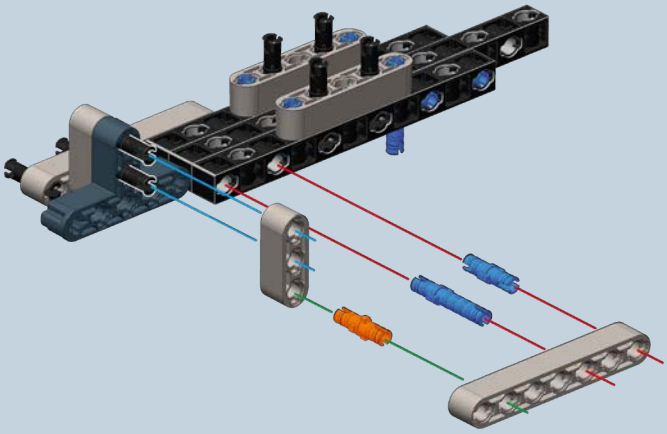

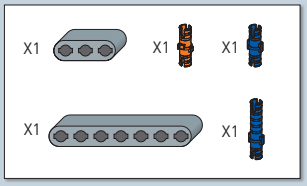

6

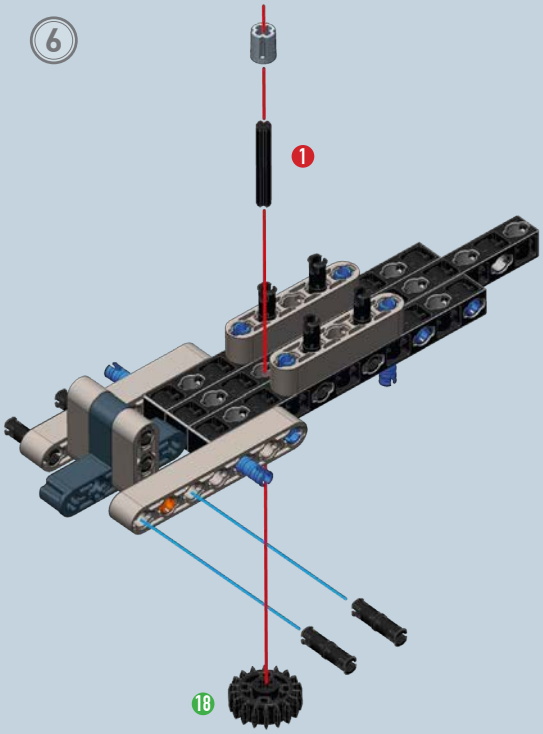

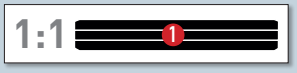

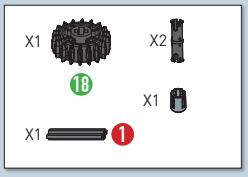

7

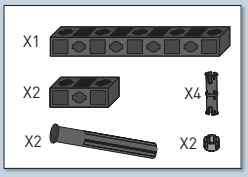

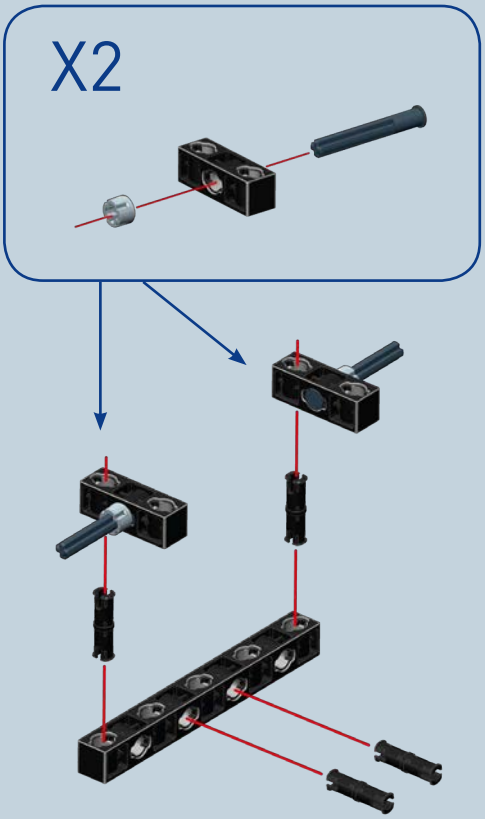

8

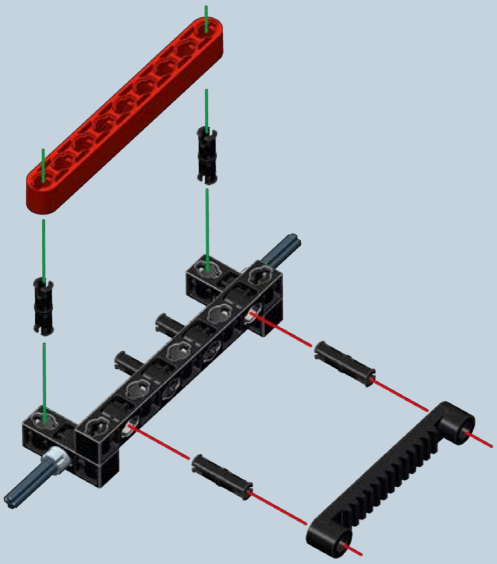

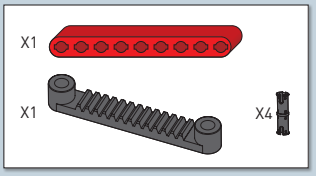

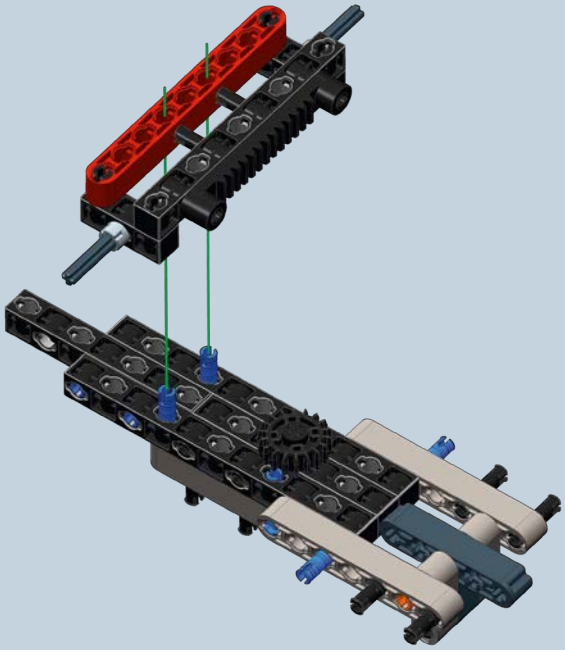

9

10

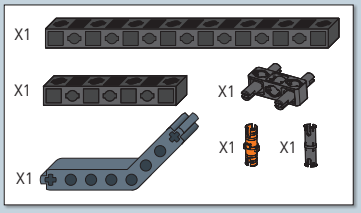

11

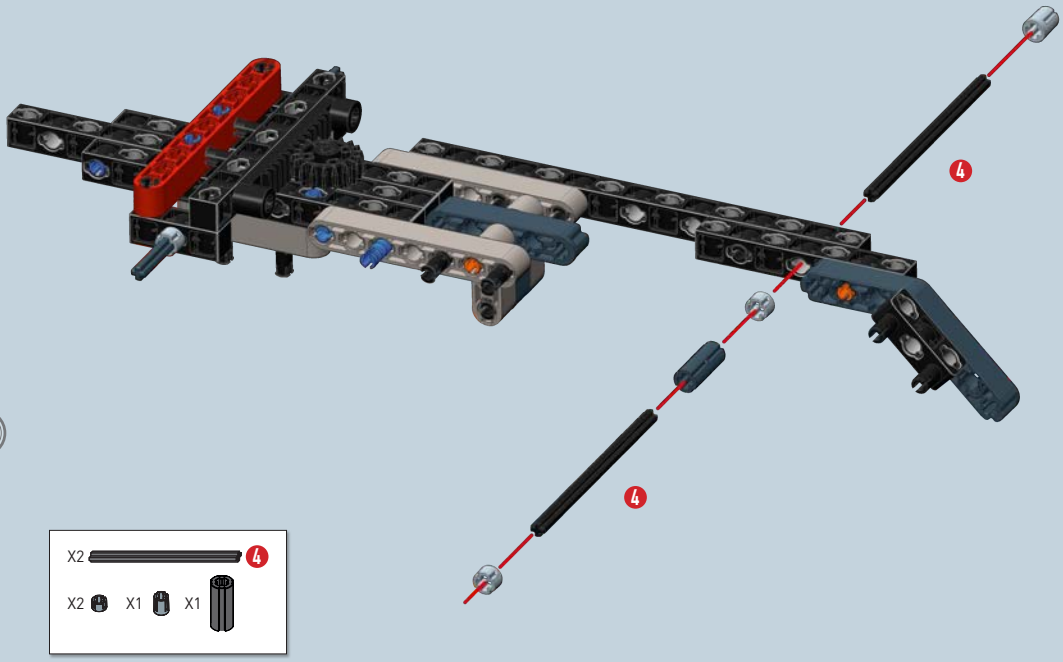

12

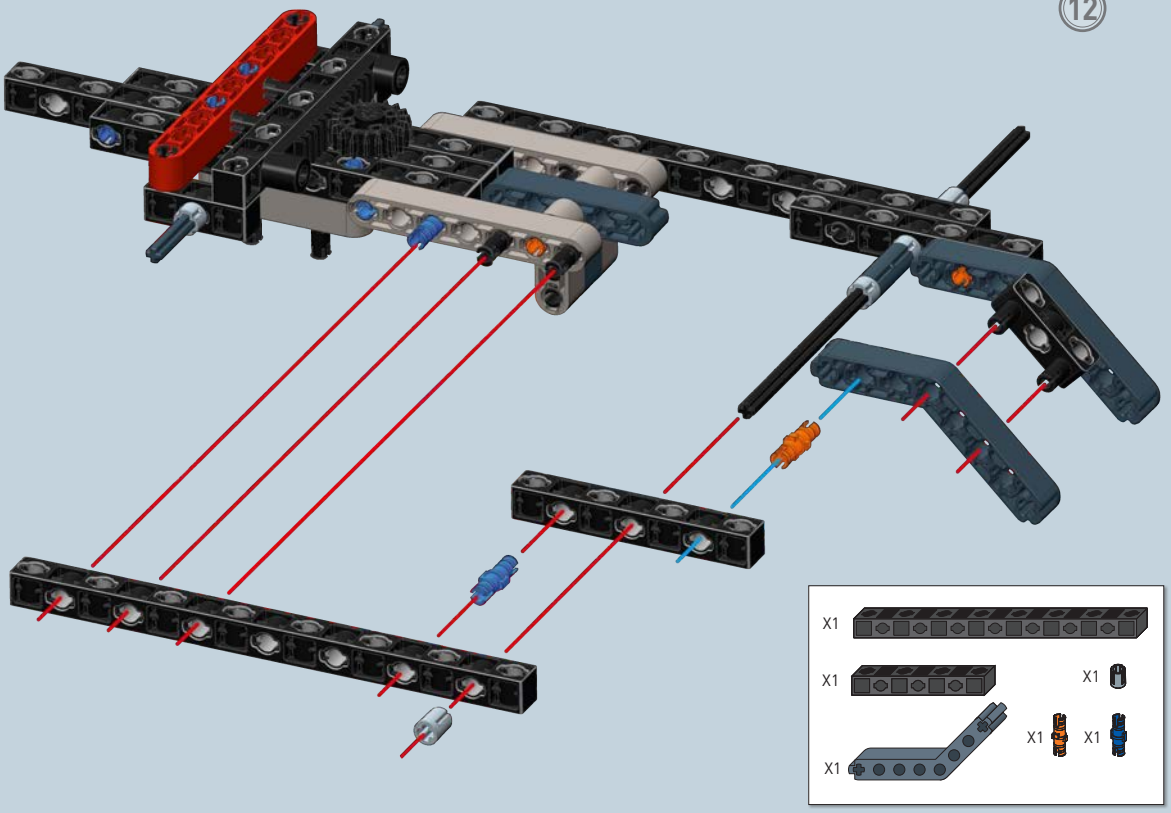

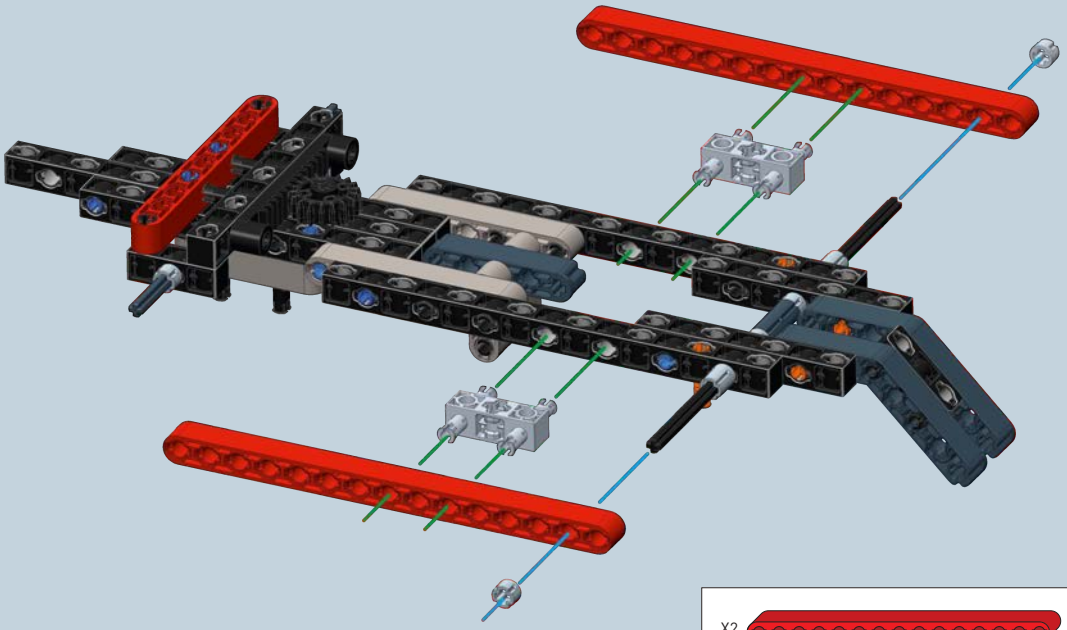

13

X2

X2

X2

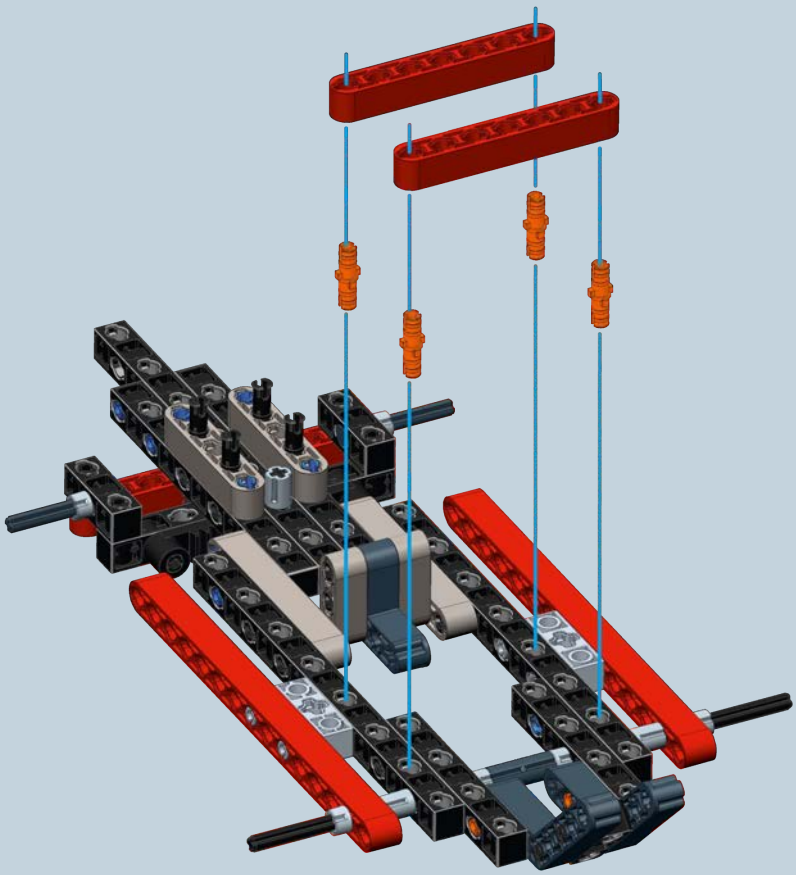

X4

X2

14

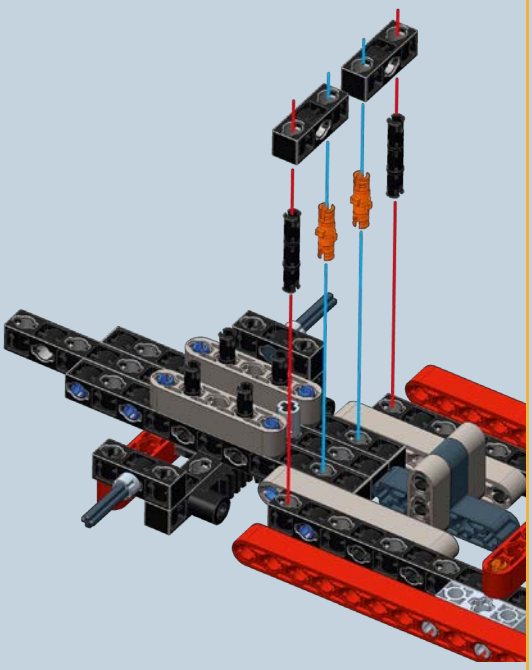

15

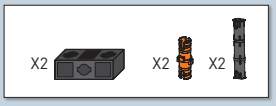

16

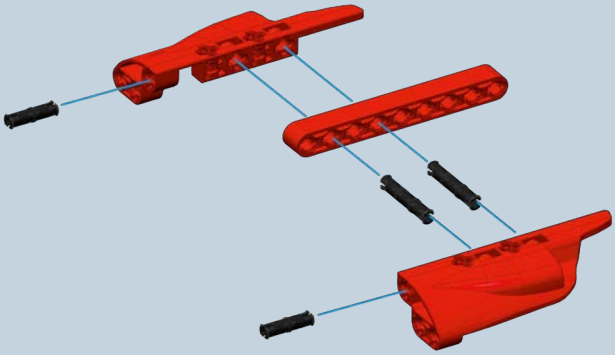

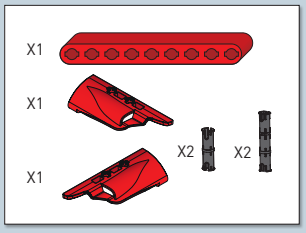

17

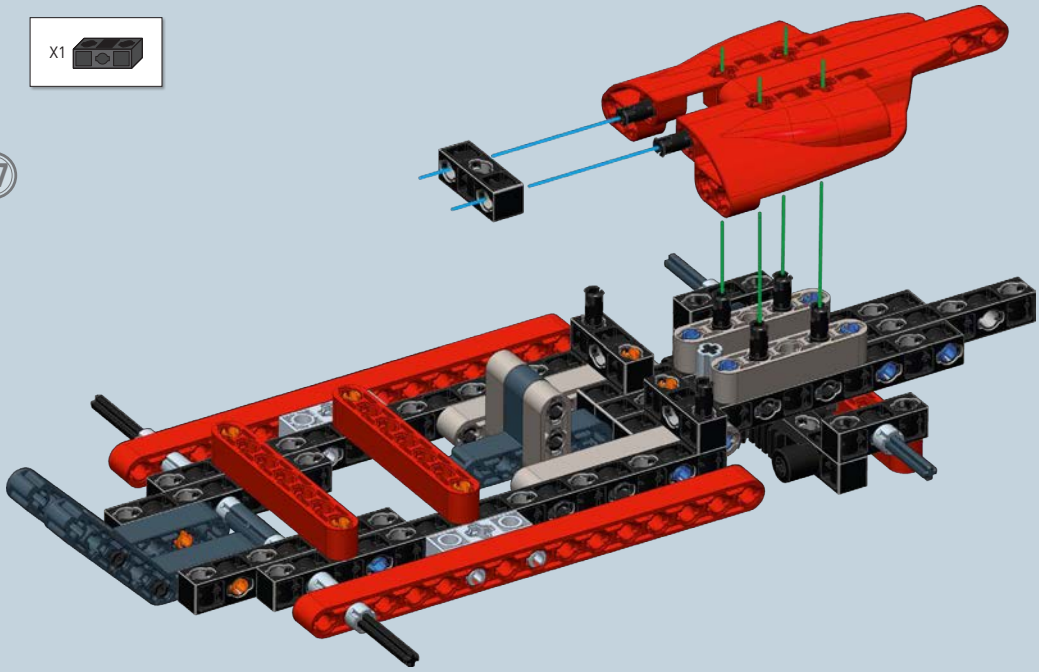

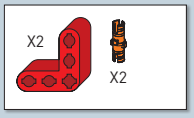

18

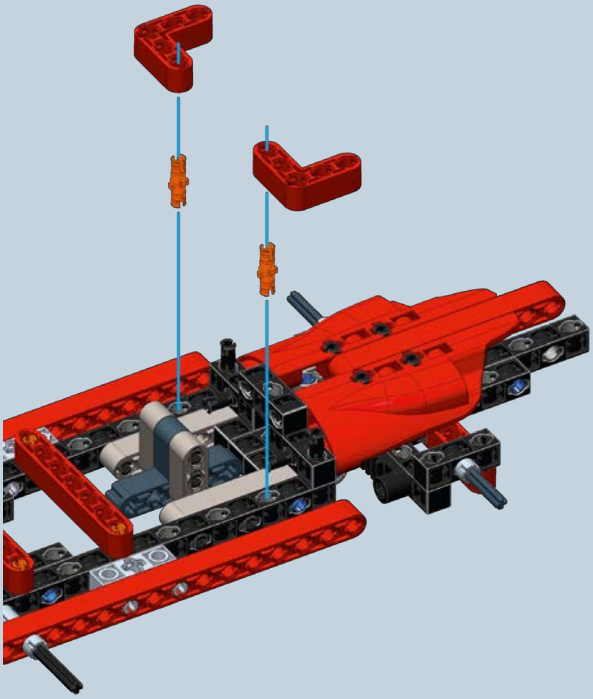

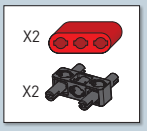

19

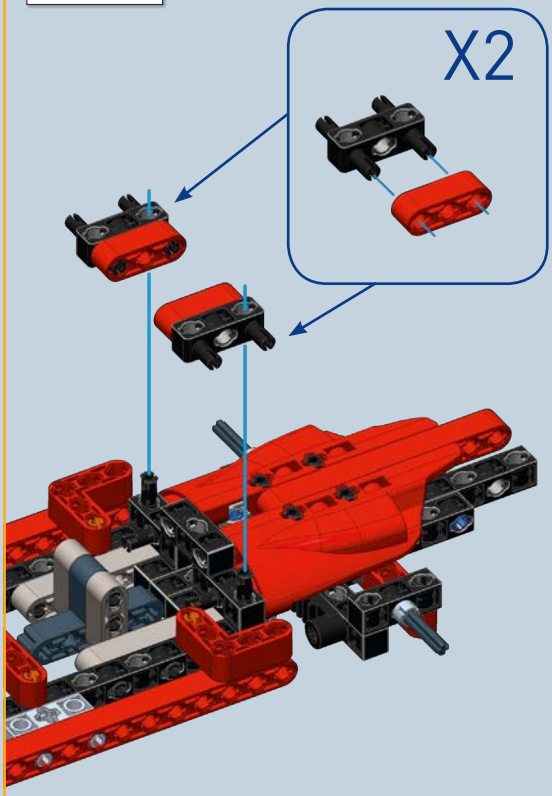

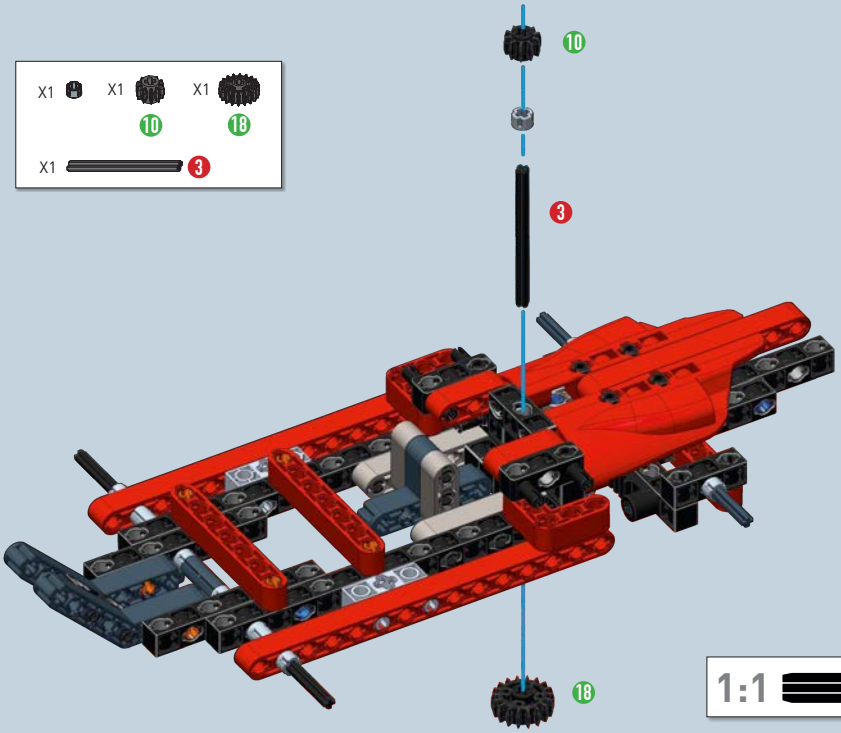

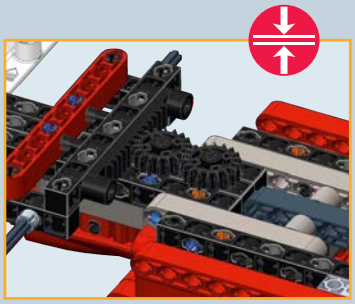

20

1:1 3

21

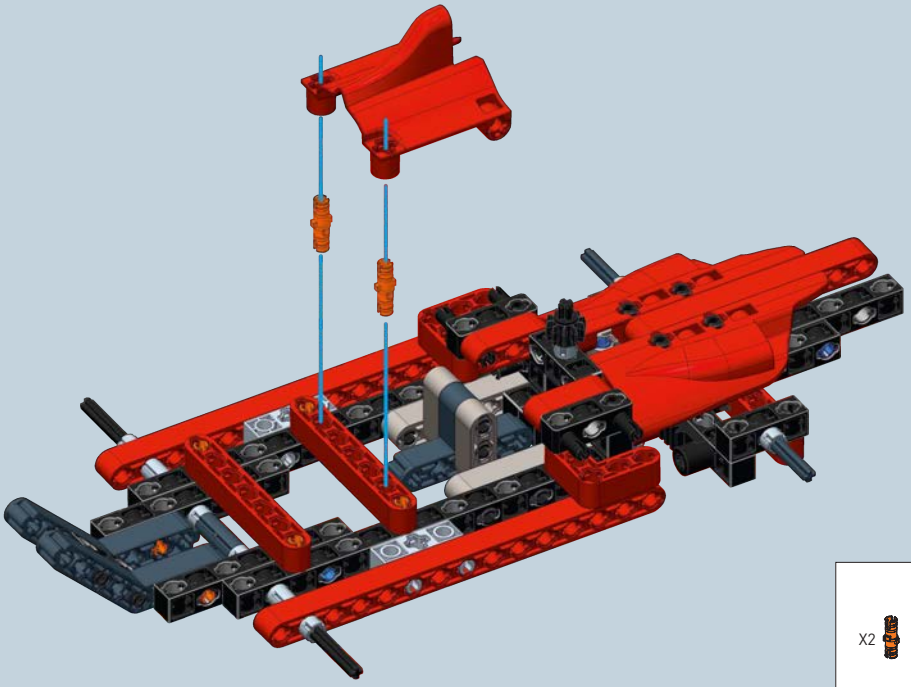

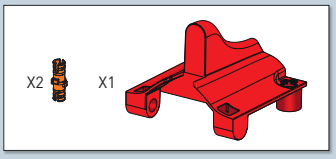

22

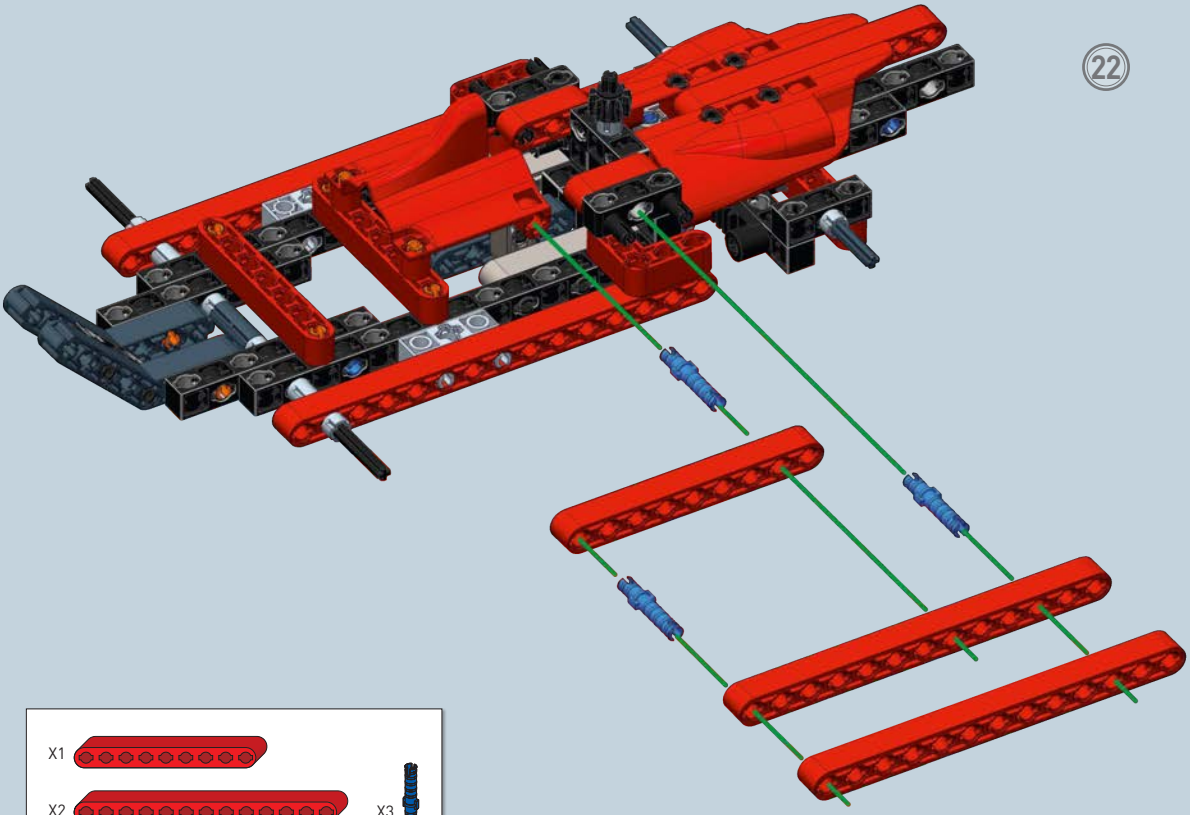

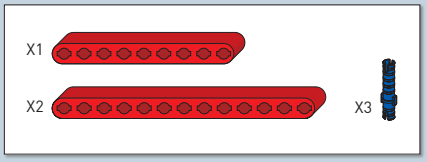

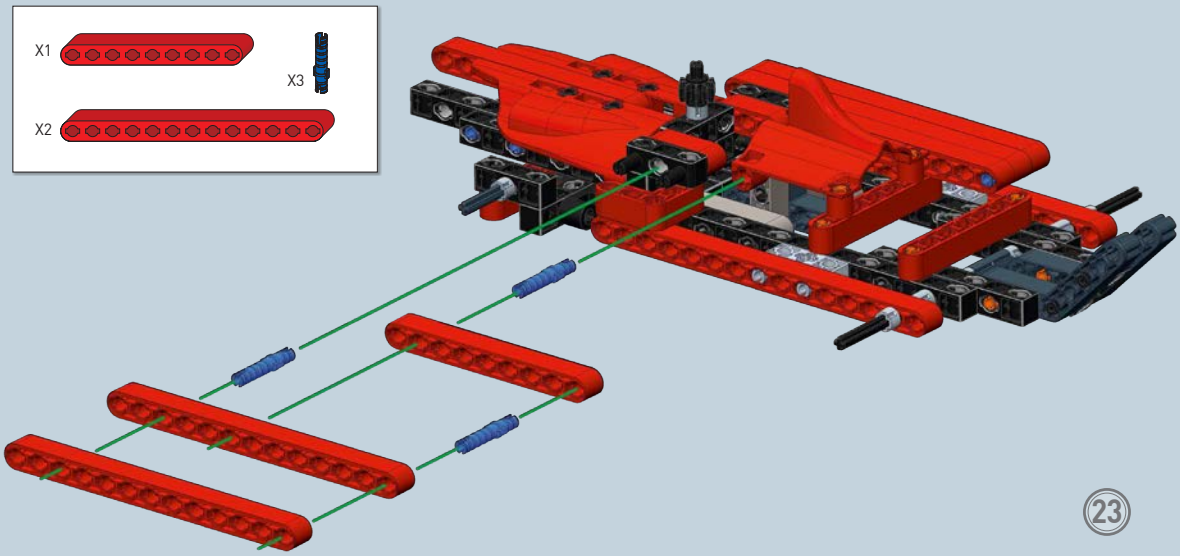
X1
X3
X2
23

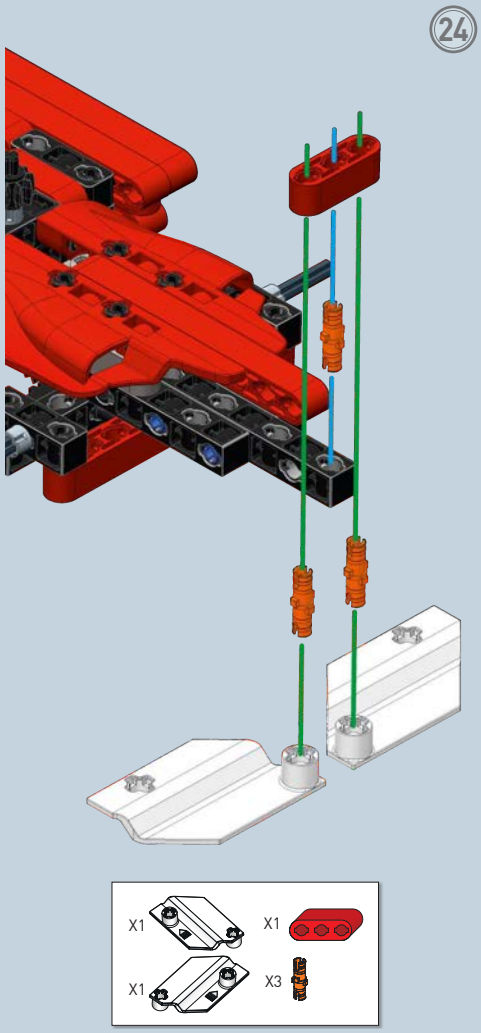
24
X1
X1
X1
X3

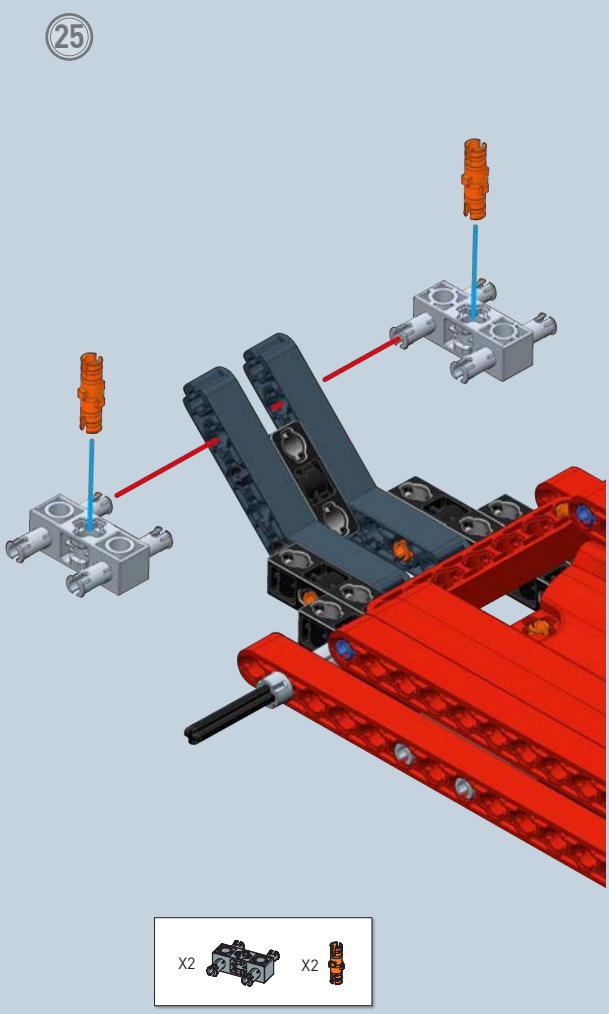
25
X2
X2

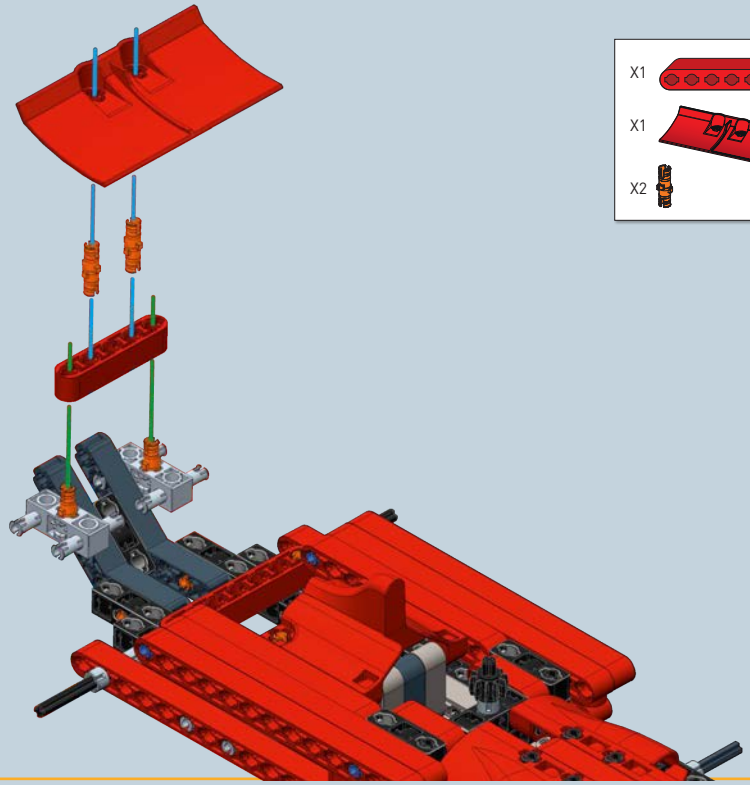

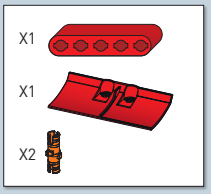

26

27

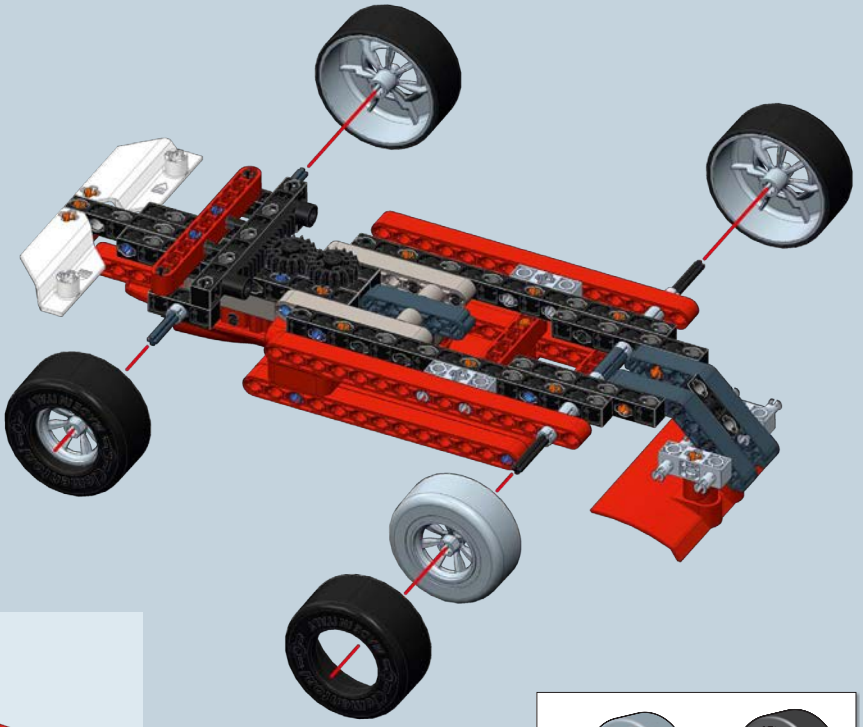

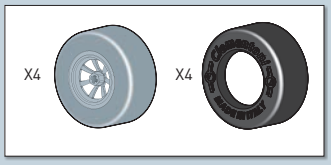

Modello finale

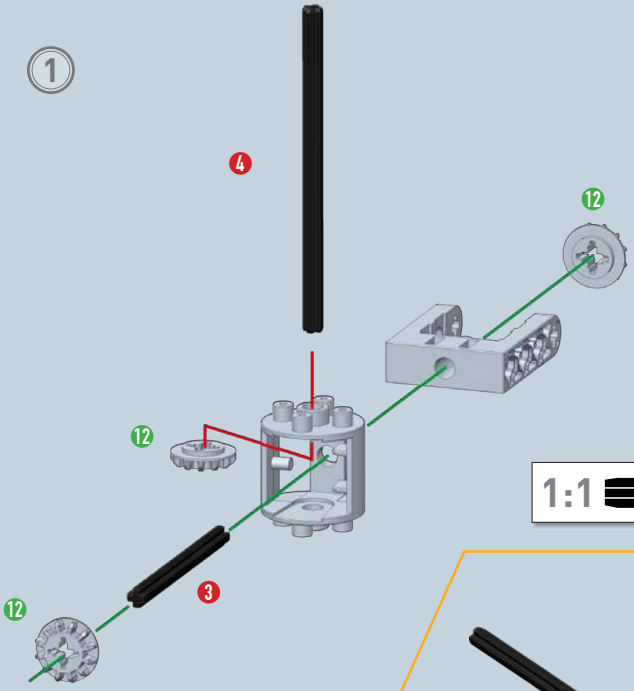
1
4
12
12
12
3

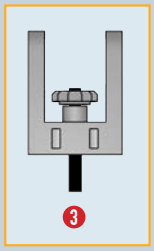
3

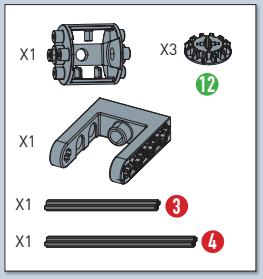
X1
X3
12
X1
X1
3
X1
4

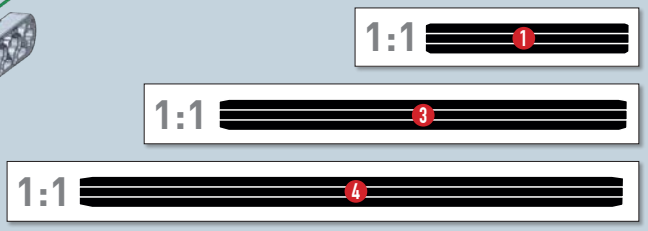
1:1
1
1:1
3
1:1
4

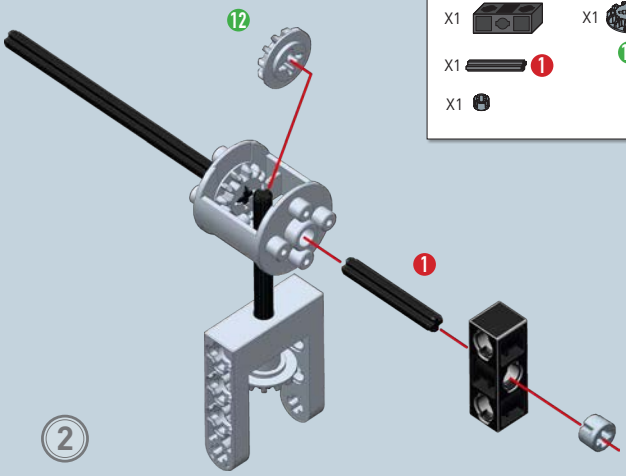
12
1
2

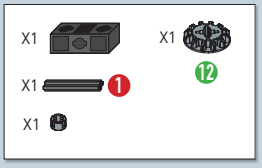
X1
X1
12
X1
1
X1

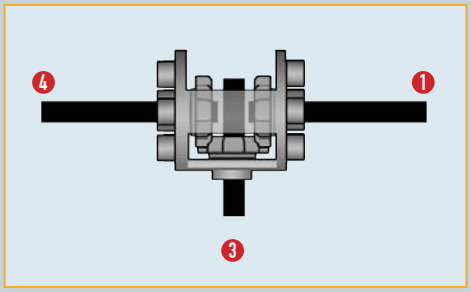
4
1
3

3

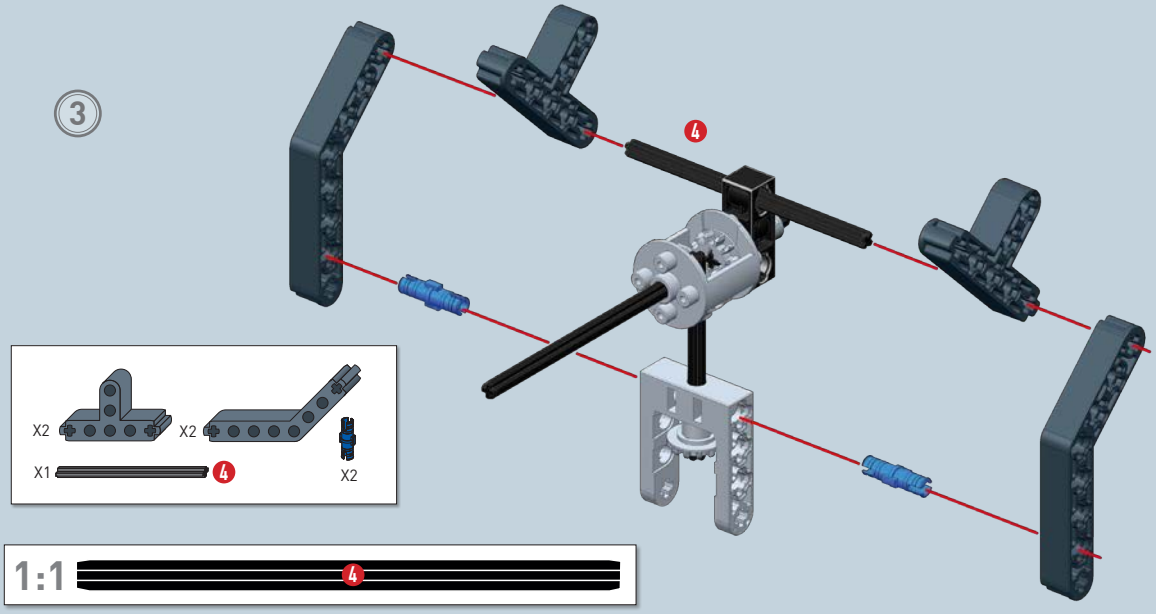

4

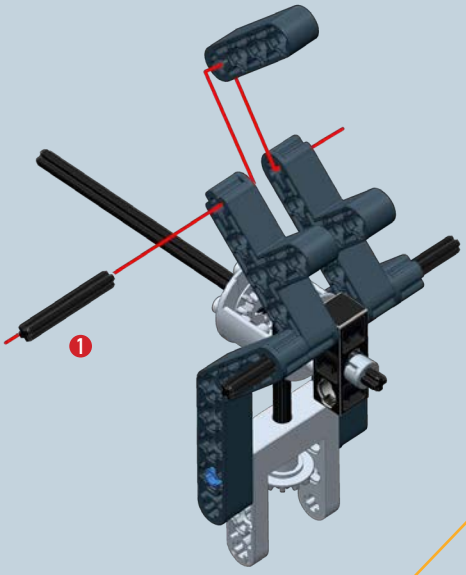

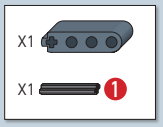

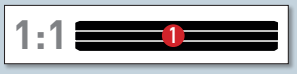

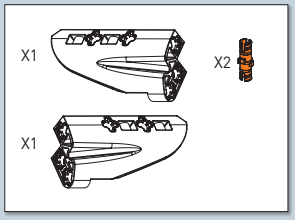

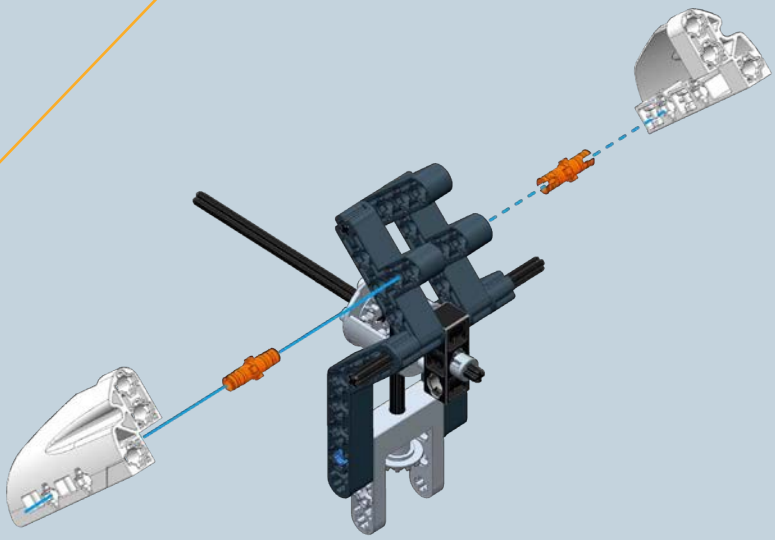

5

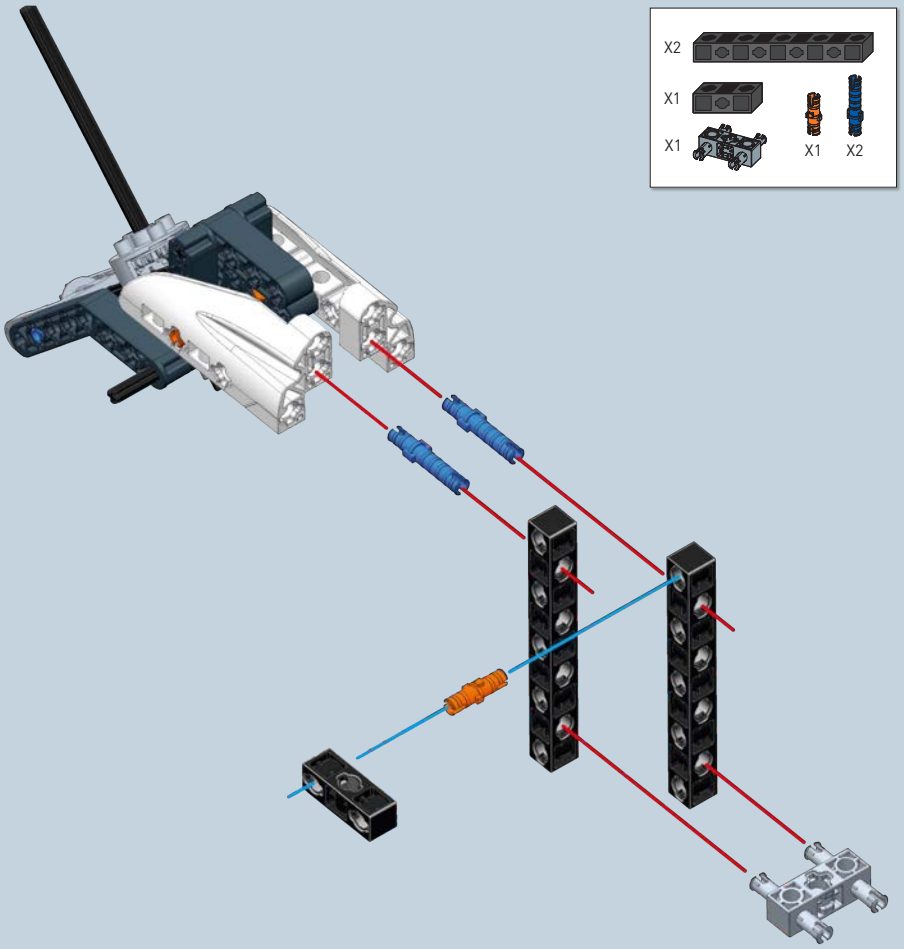

6

7

8

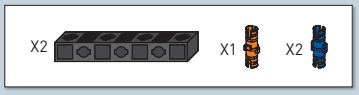

9

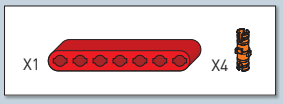

10

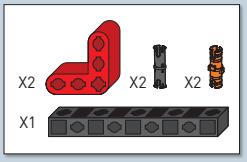

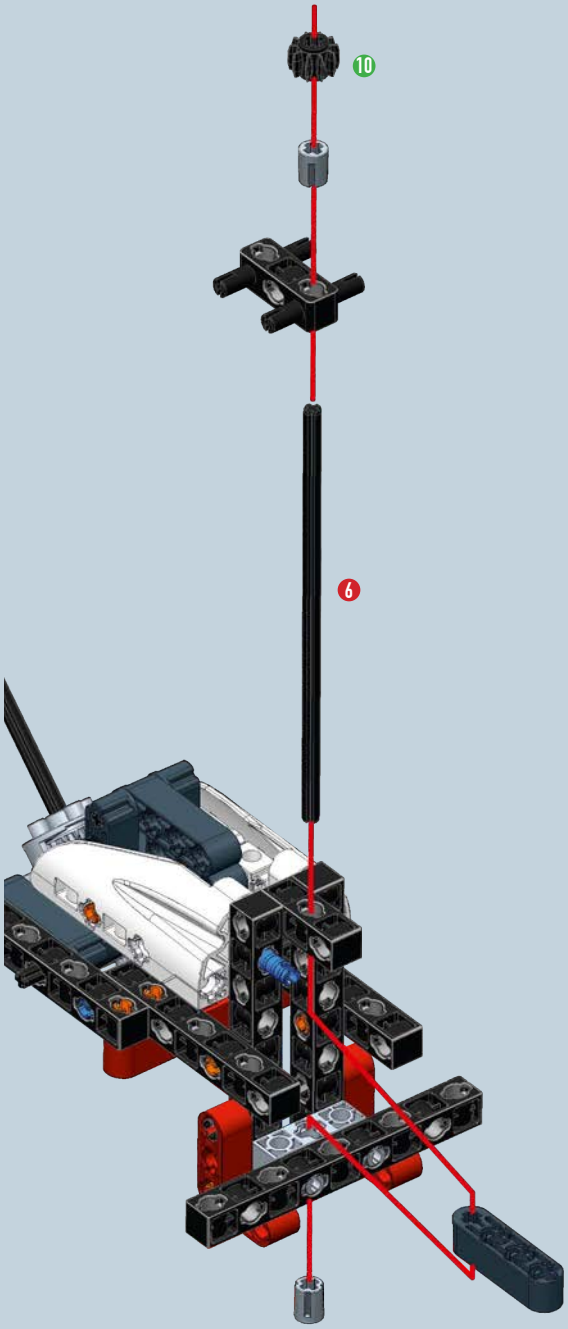

11

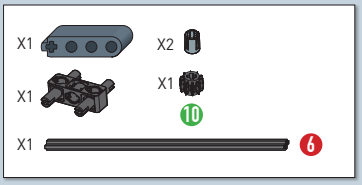

12

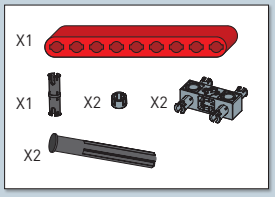

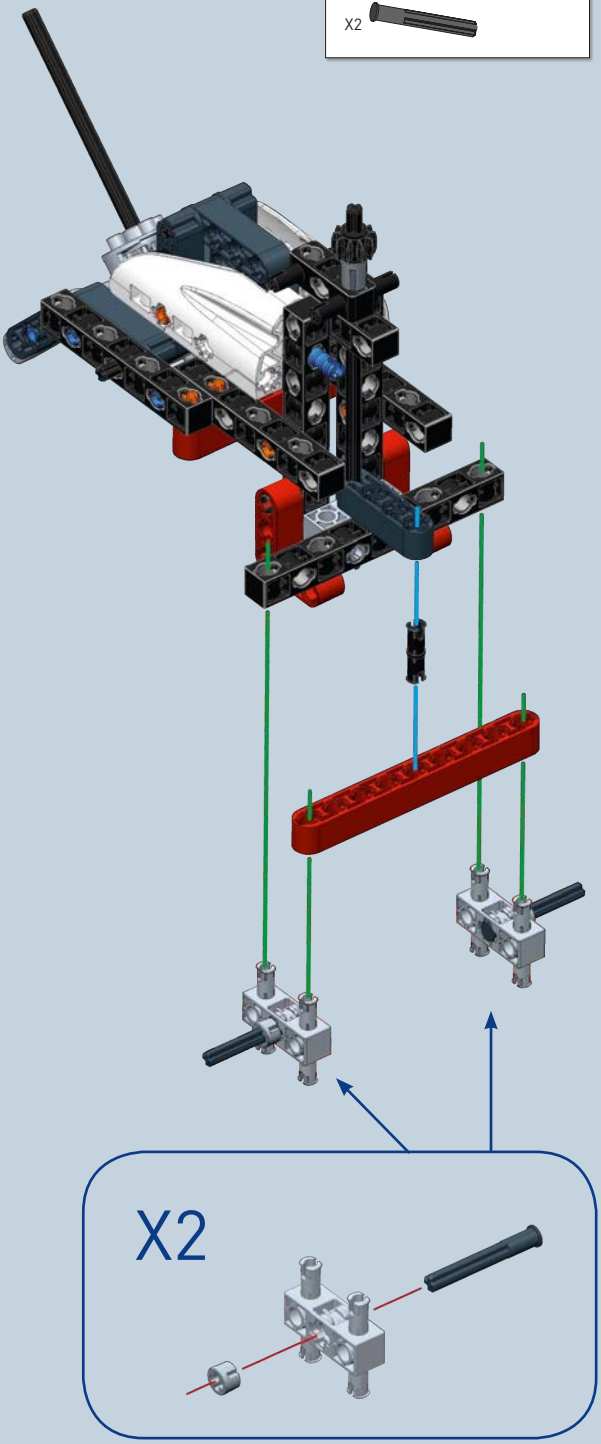

1:1

13

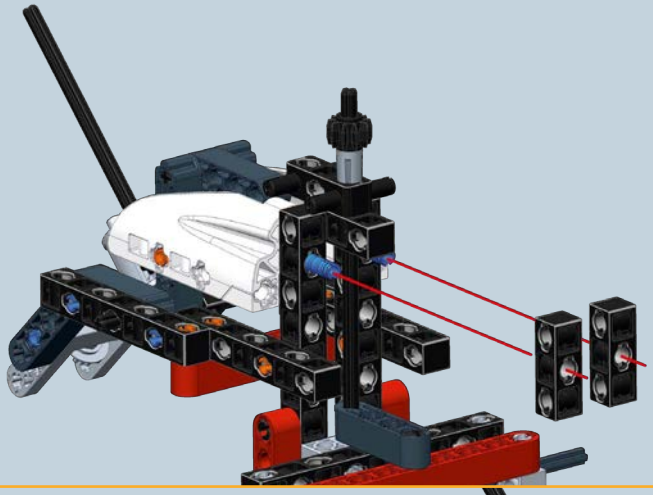

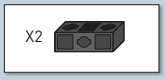

14

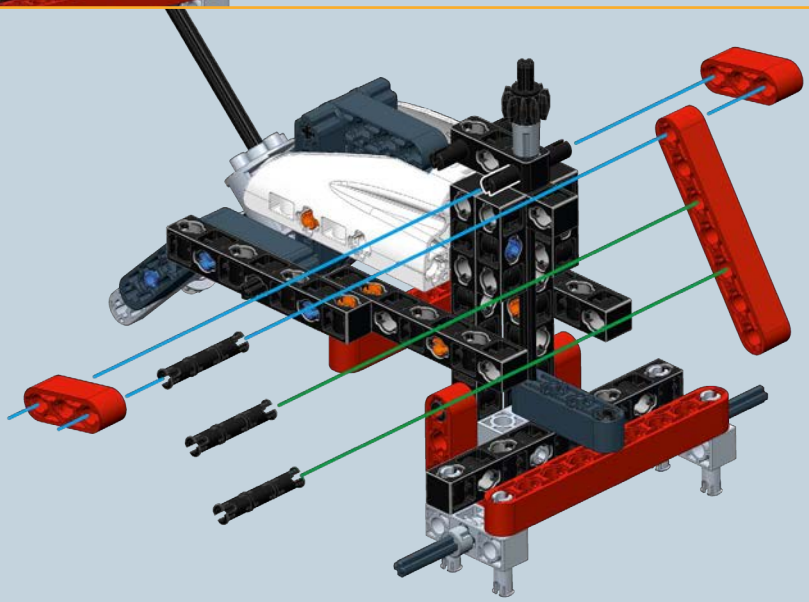

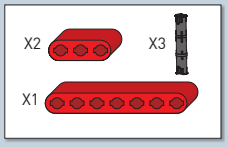

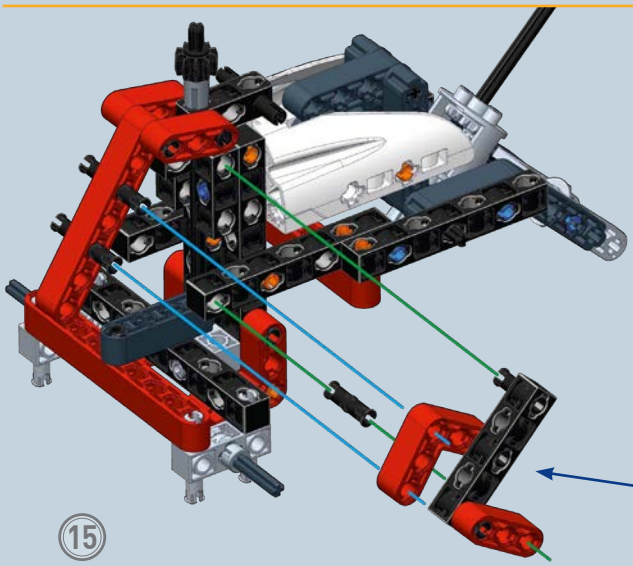

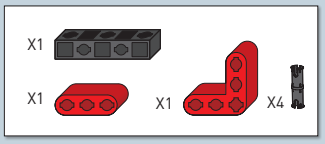

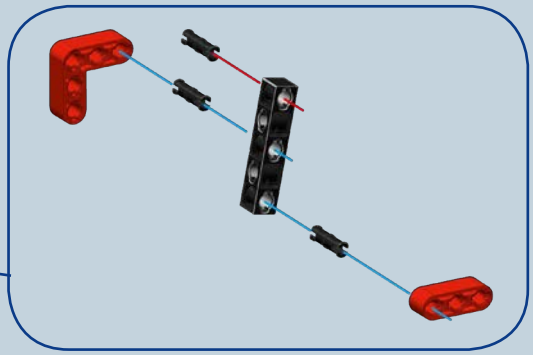

15

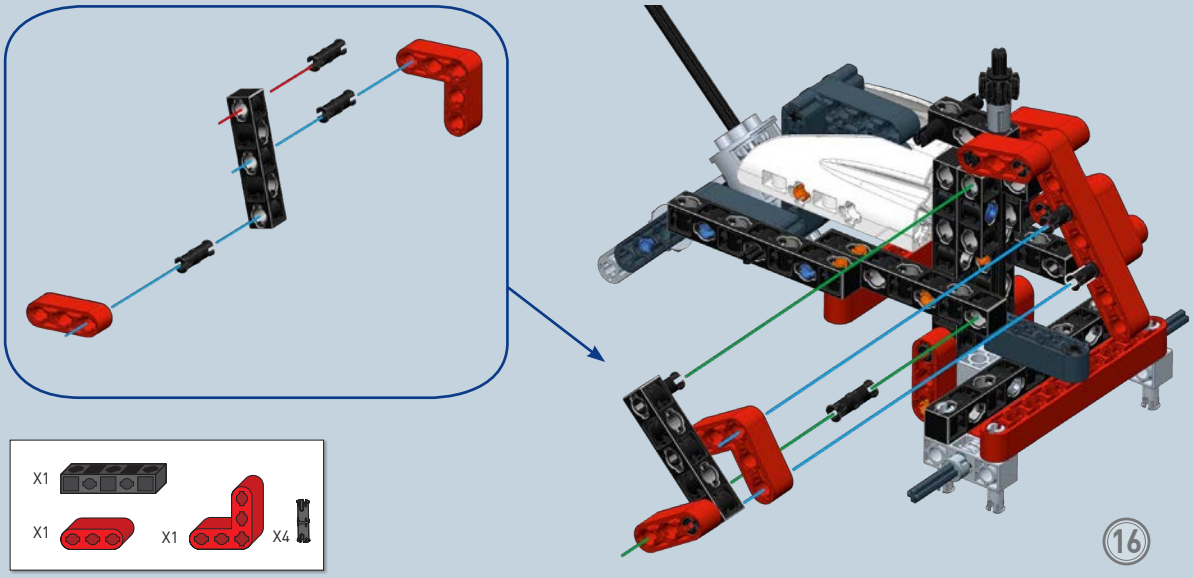
X1
X1
X1
X4
16

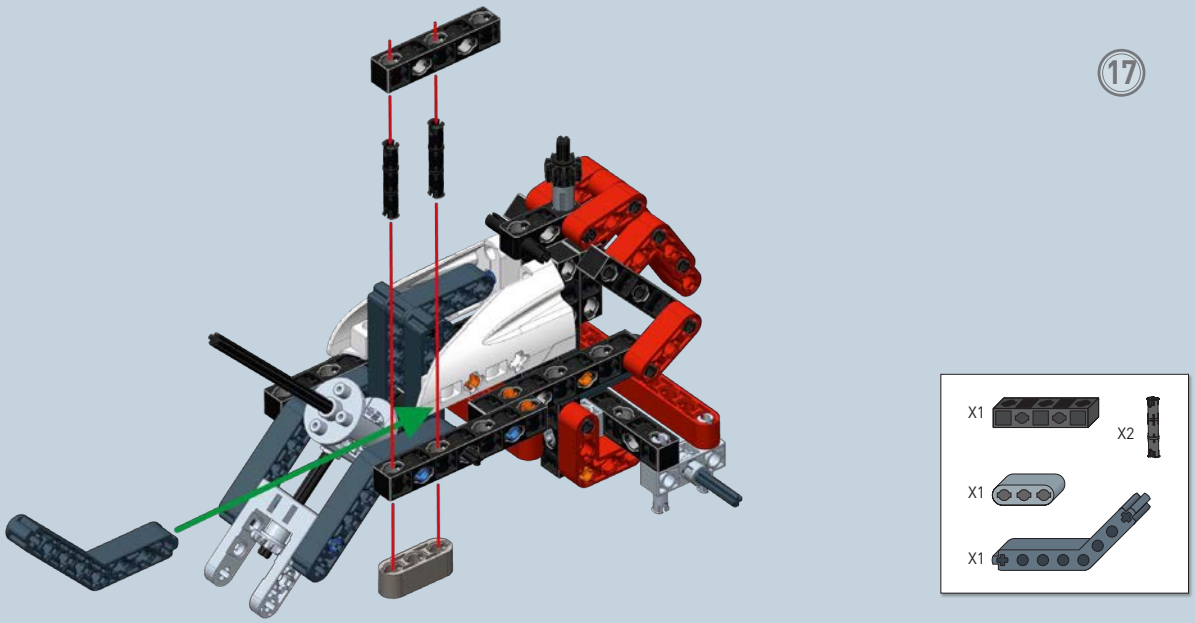
17
X1
X2
X1
X1

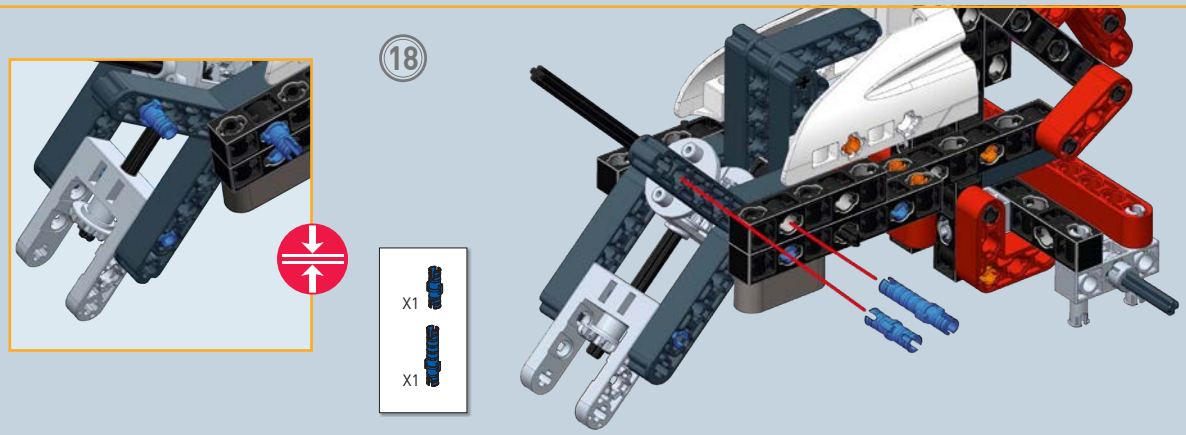
18
X1
X1

19

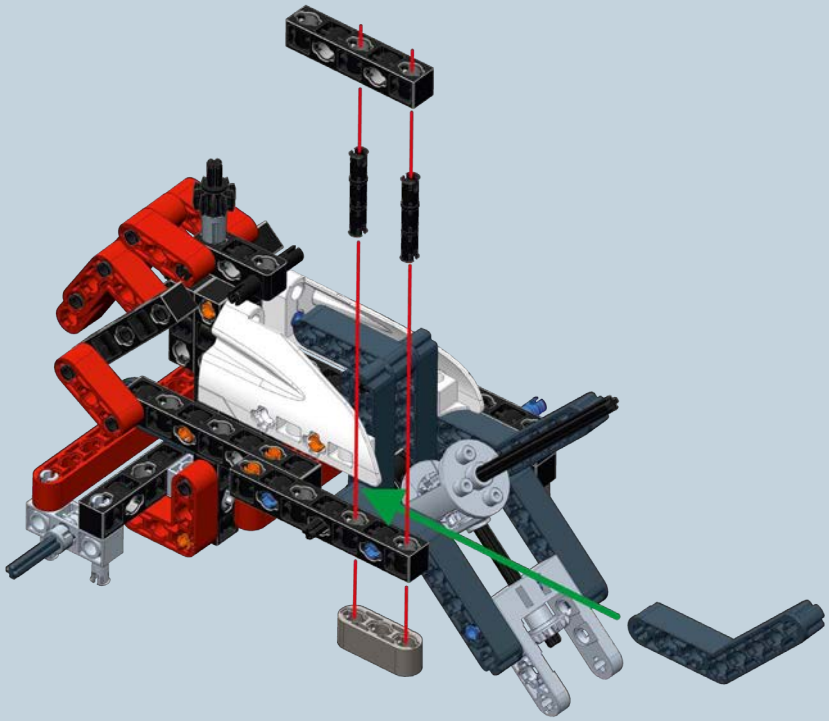

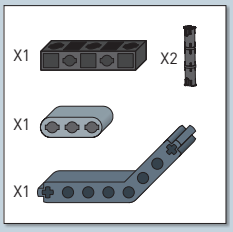

20

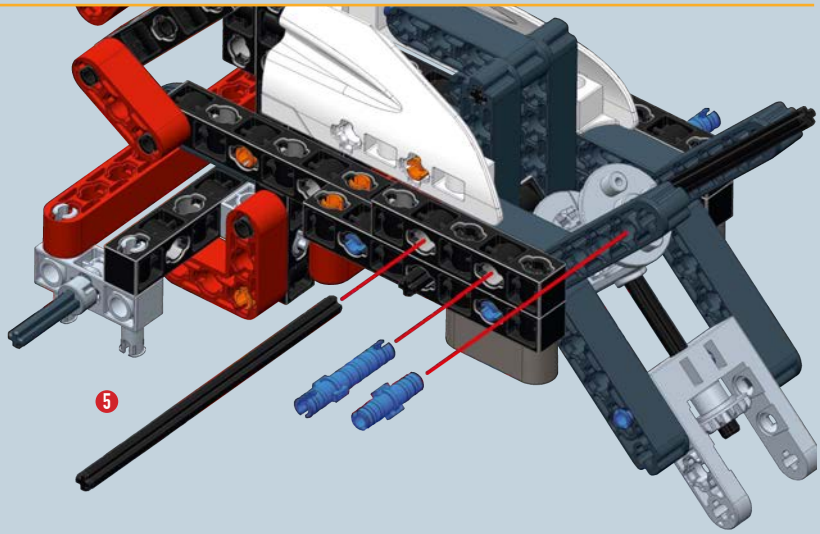

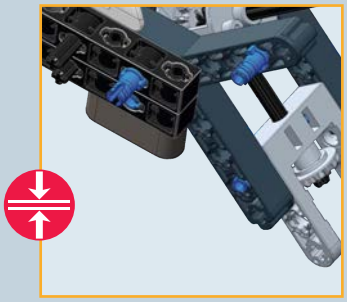

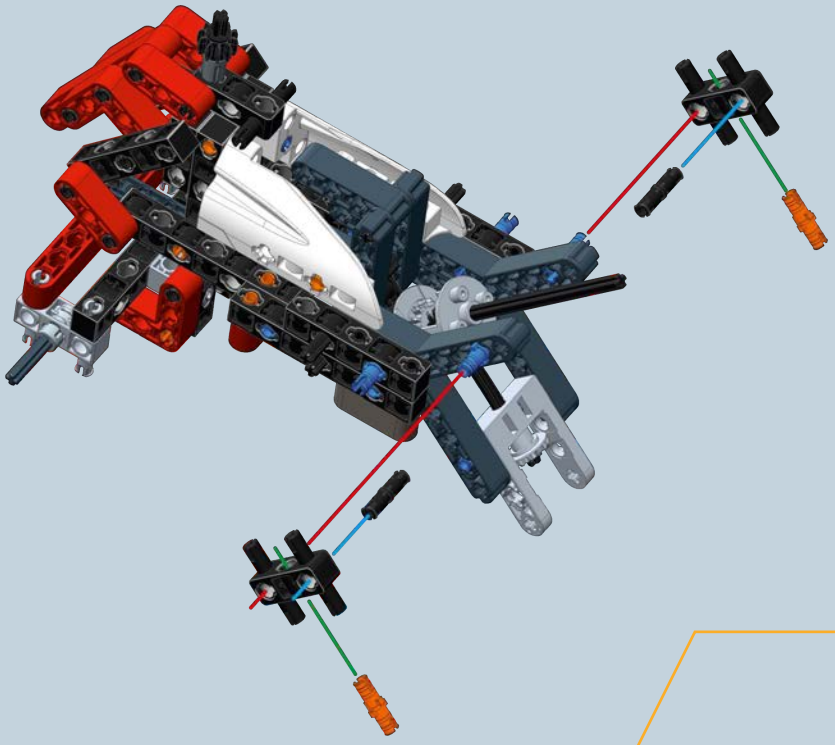

21

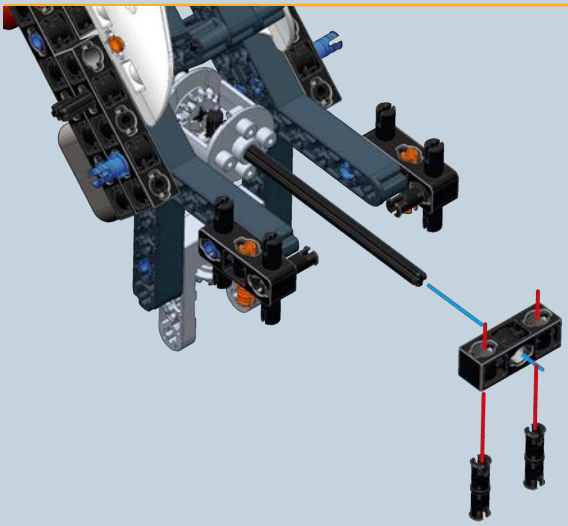

22

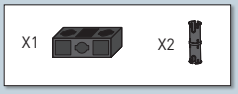

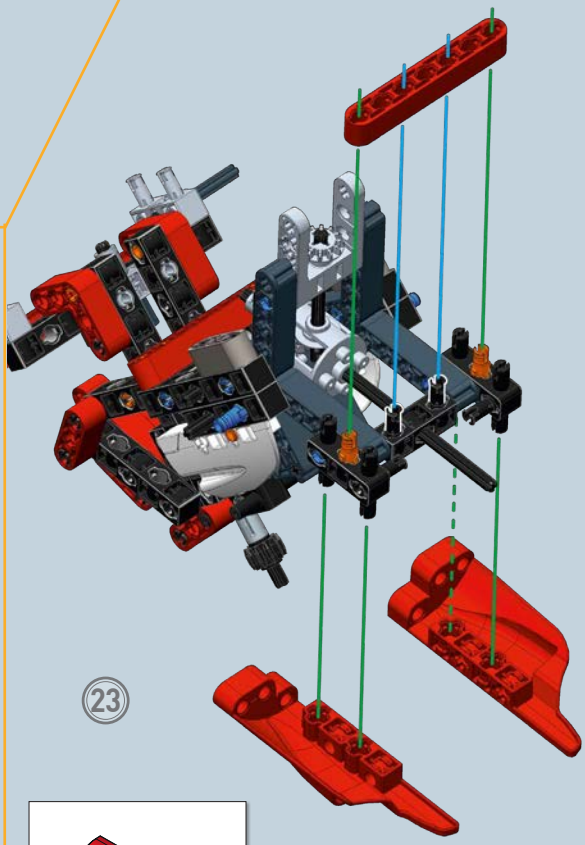

23

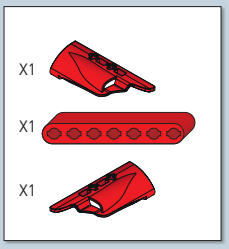

24

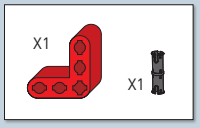

25

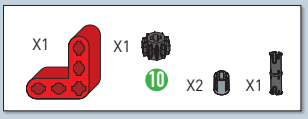

26

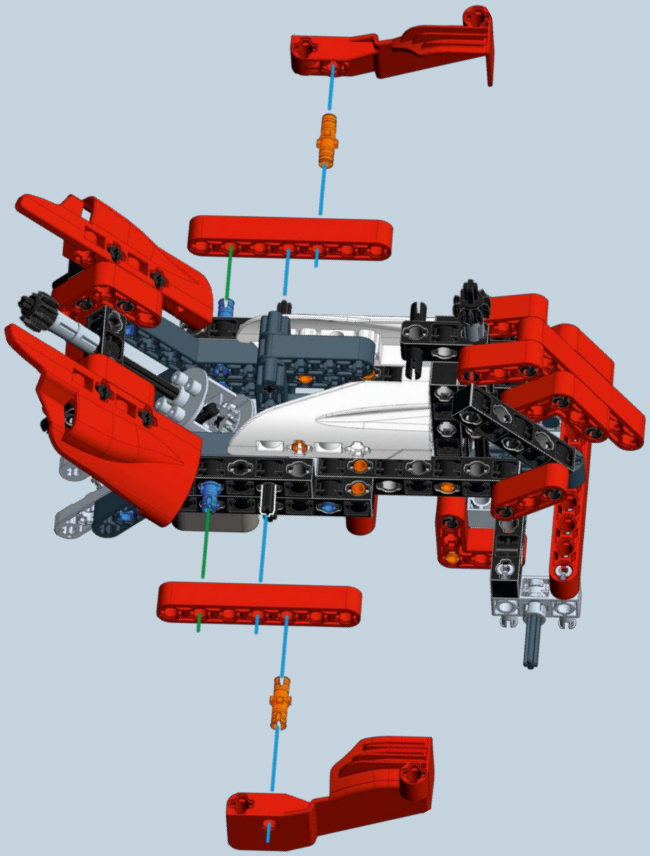

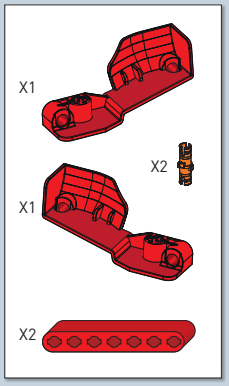

27

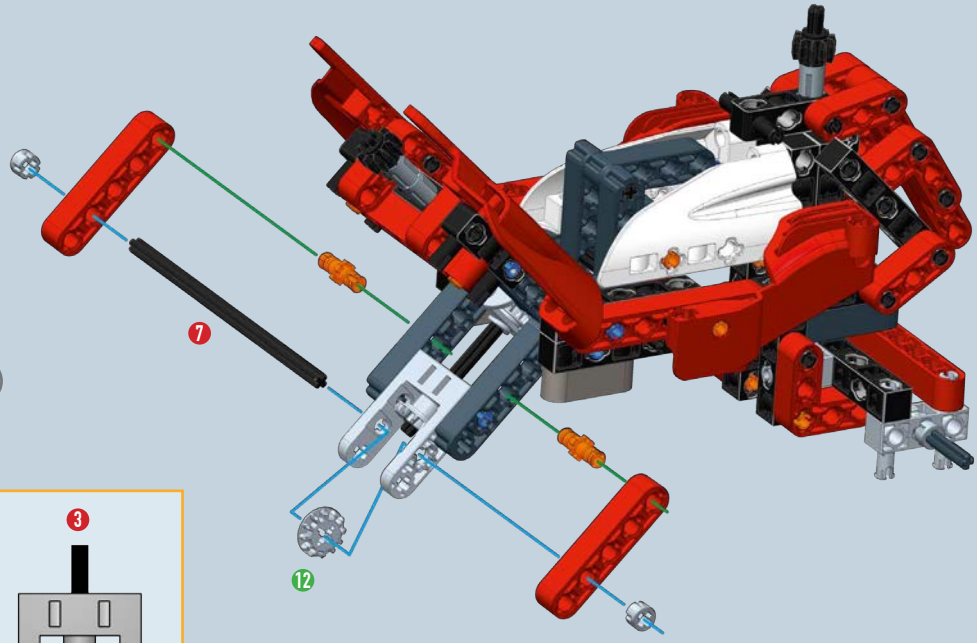

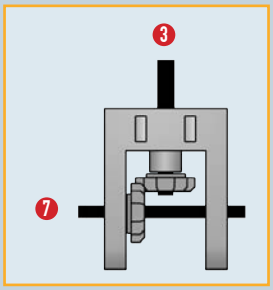

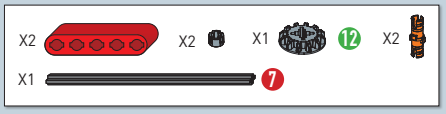

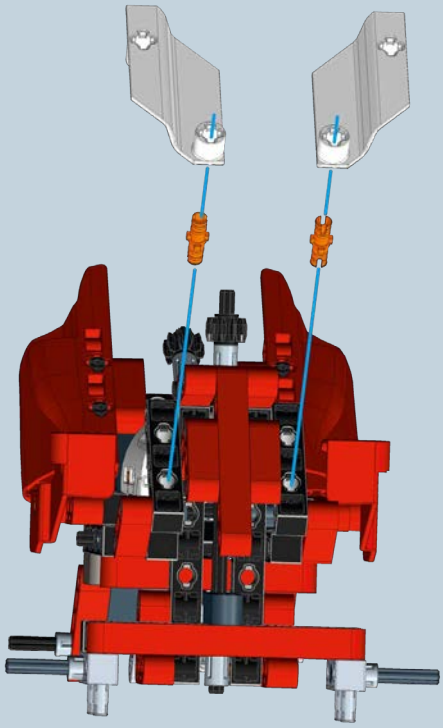

28

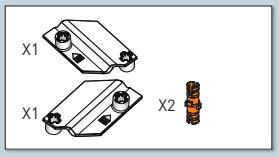

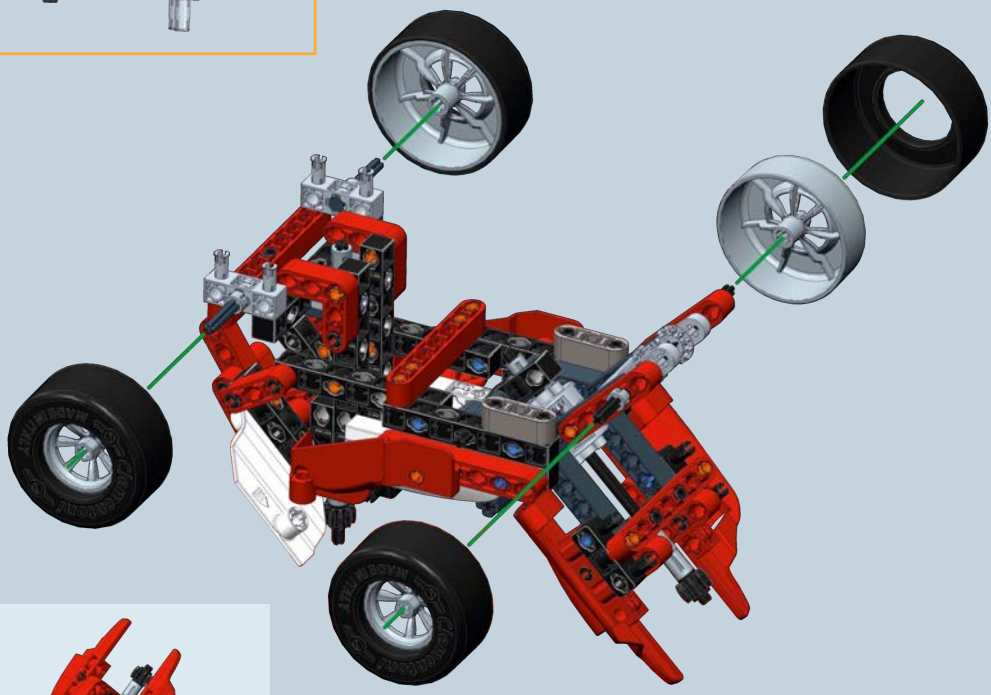

Modello finale

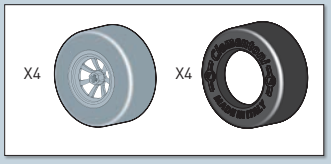

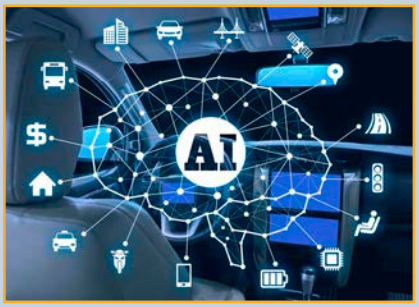

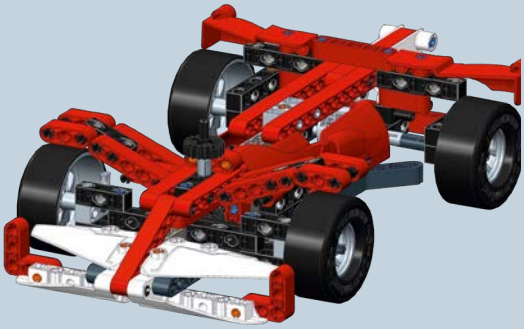

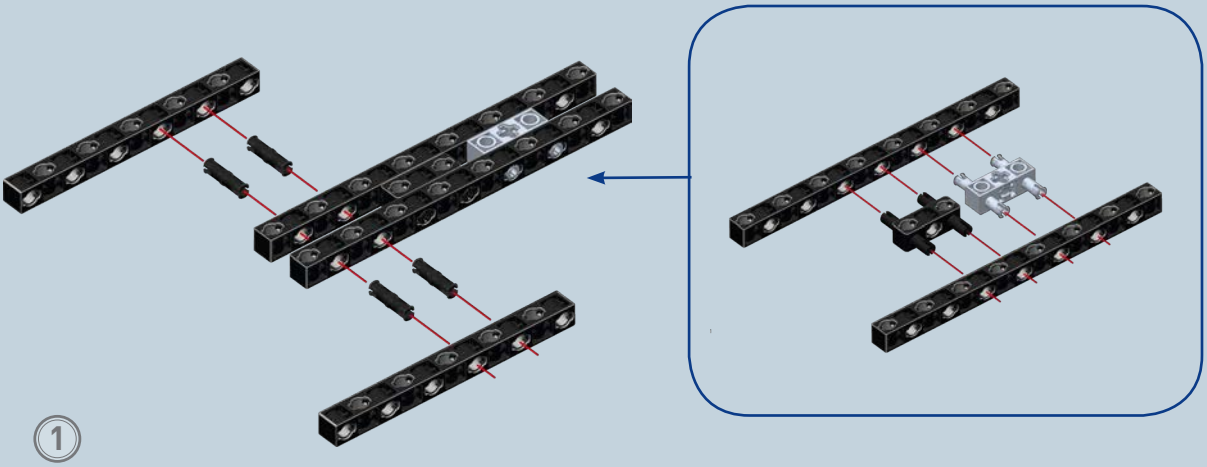

1

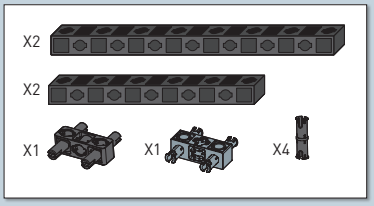

2

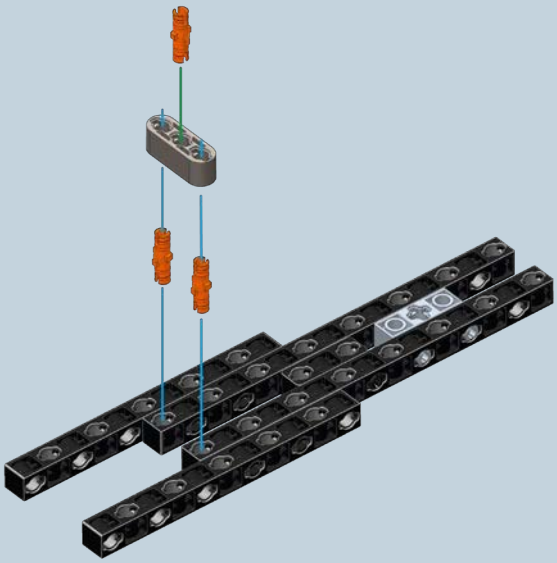

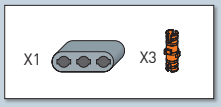

3

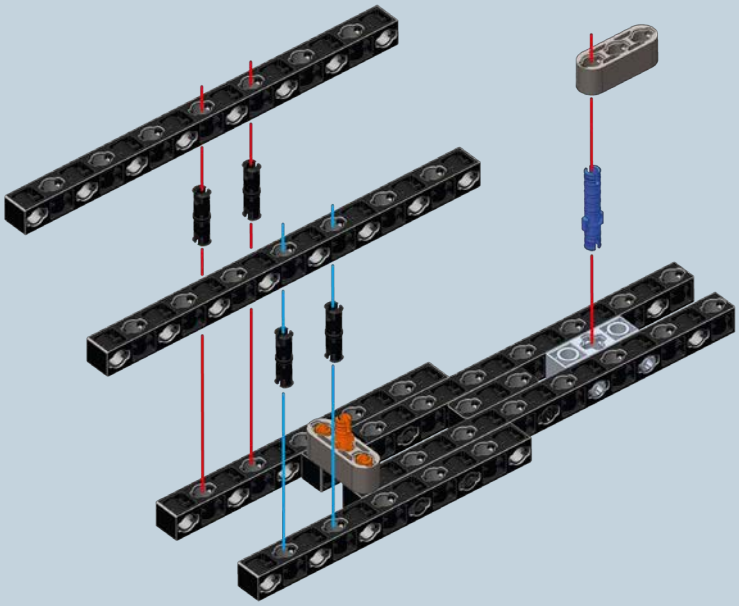

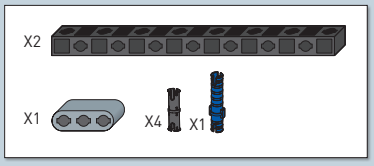

4

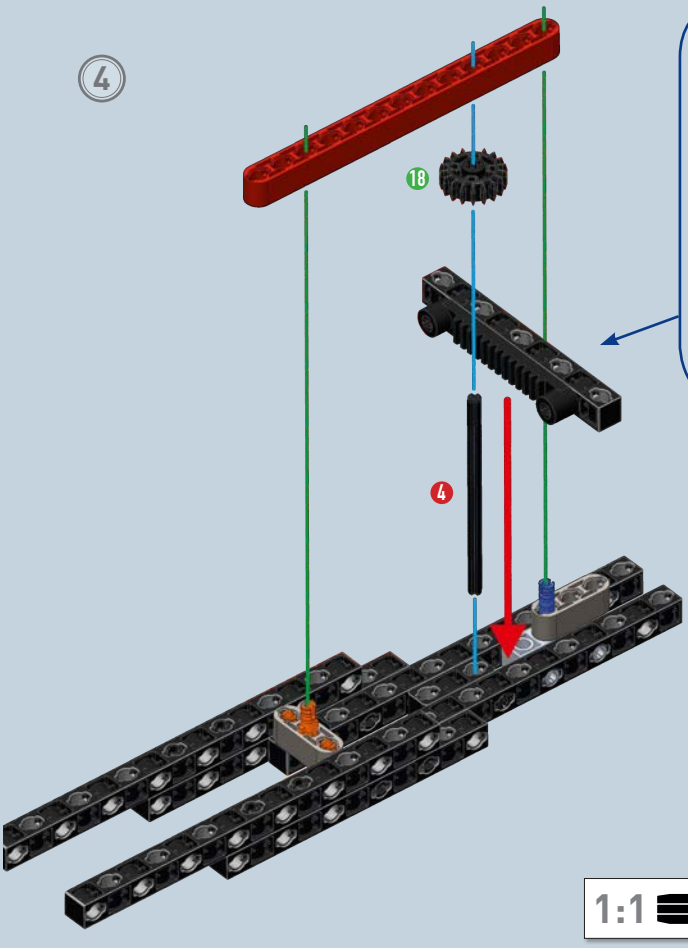

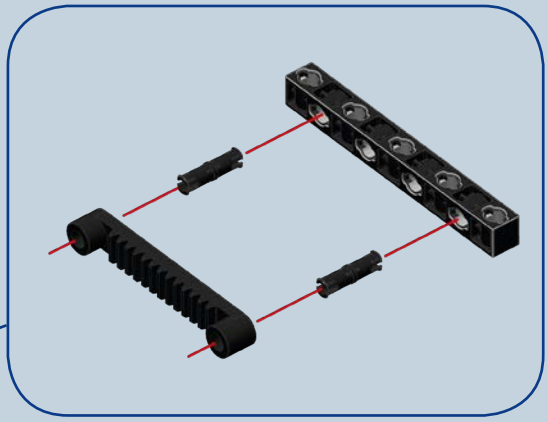

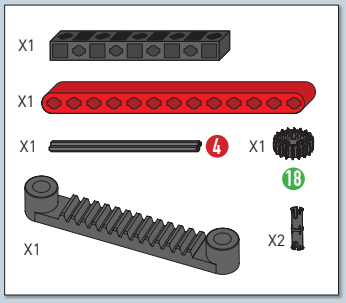

1:1 4

5

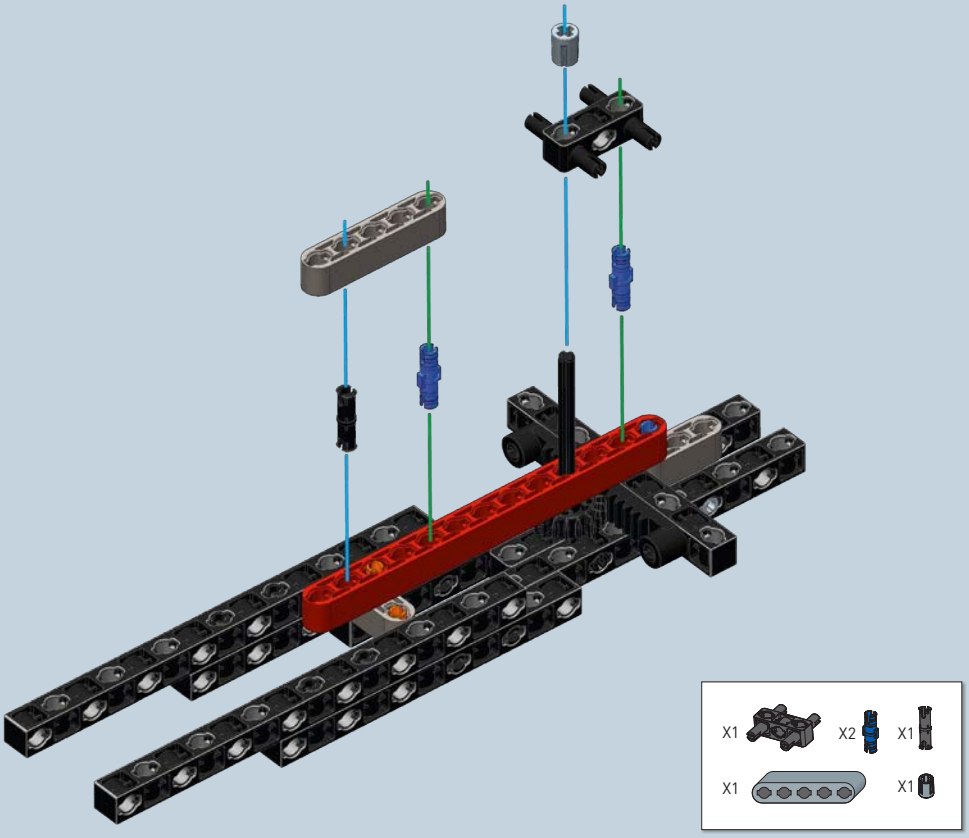

6

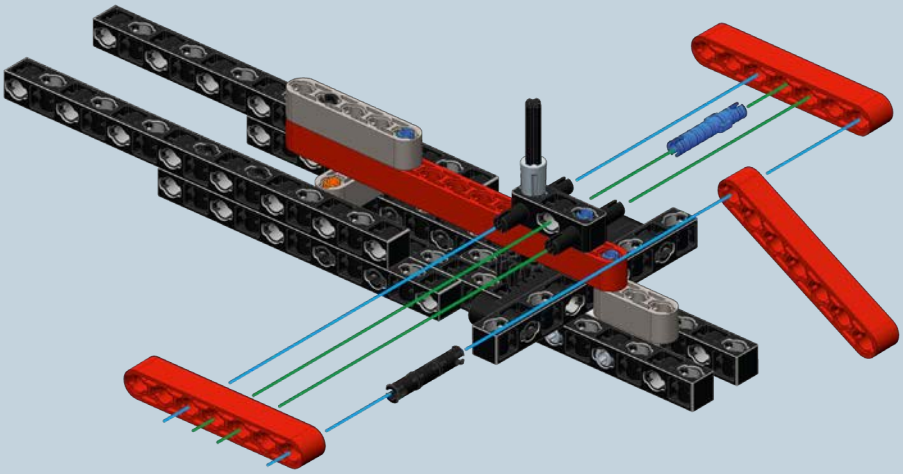

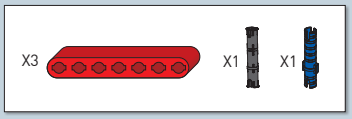

7

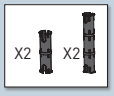

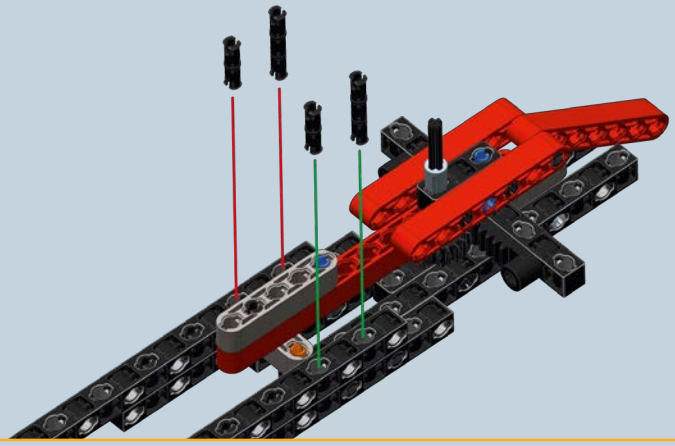

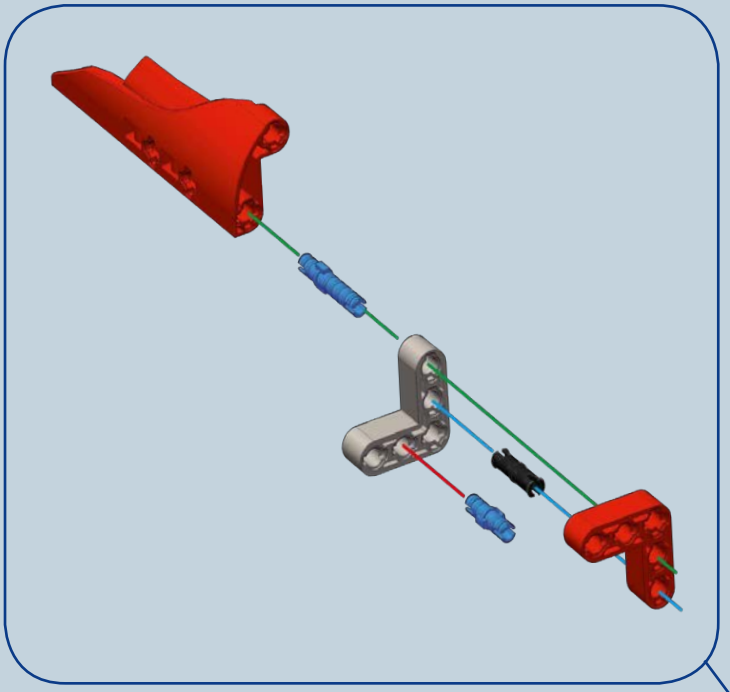

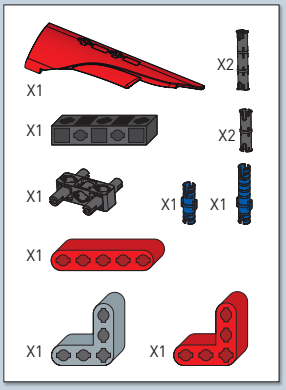

8

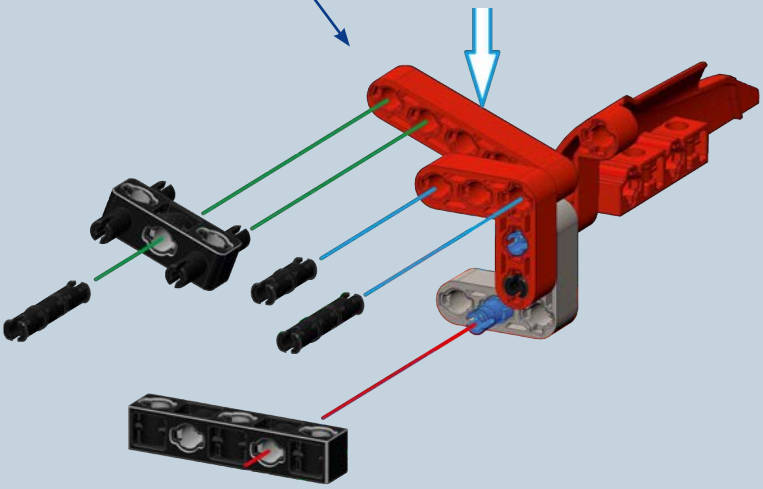

9

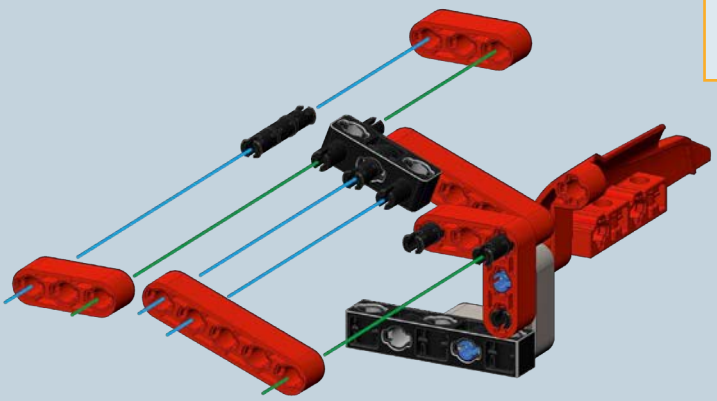

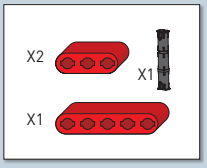

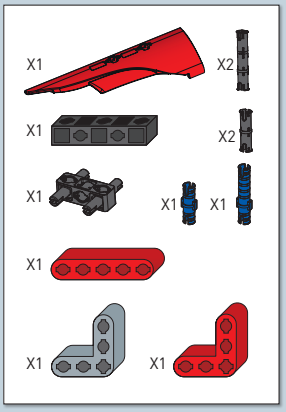

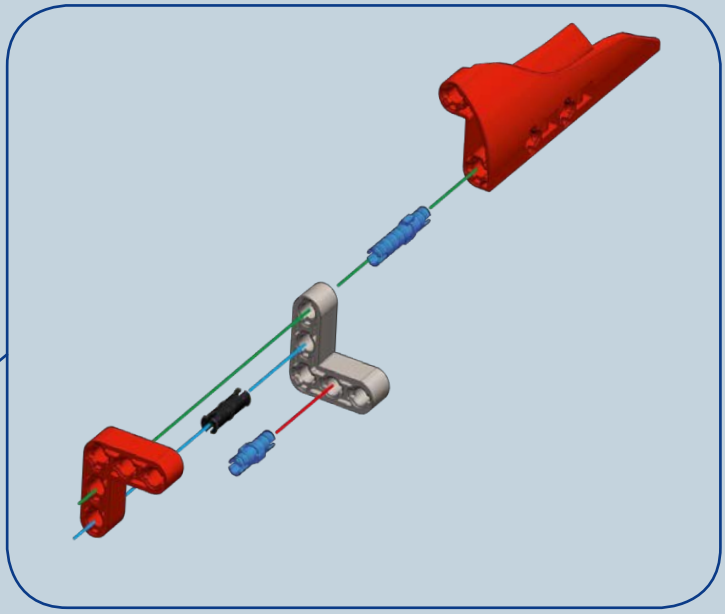

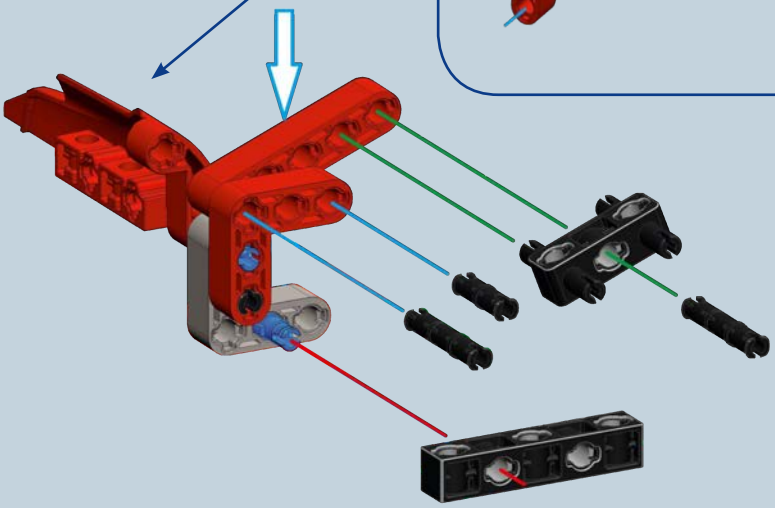

10

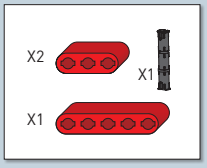

11

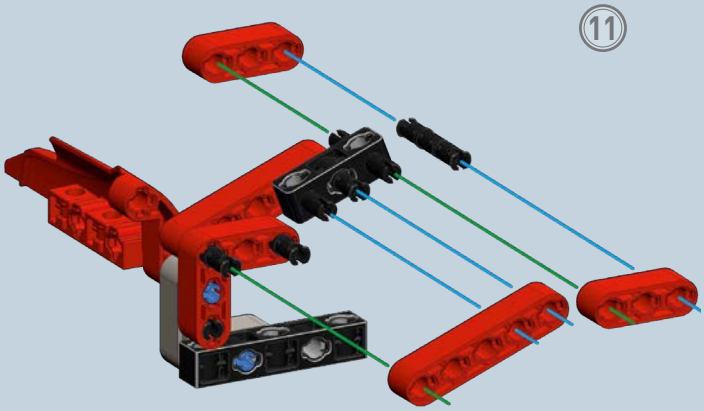

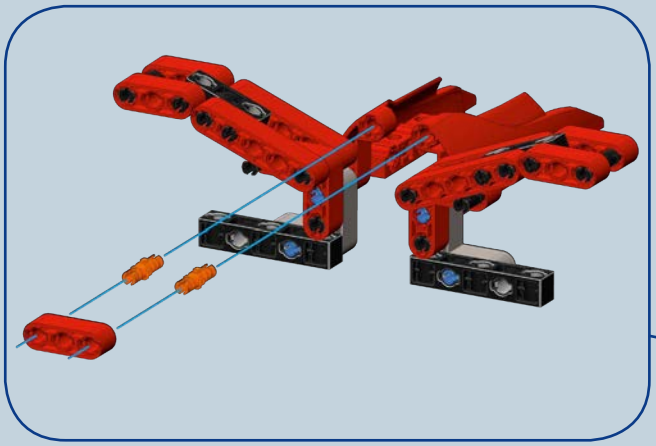

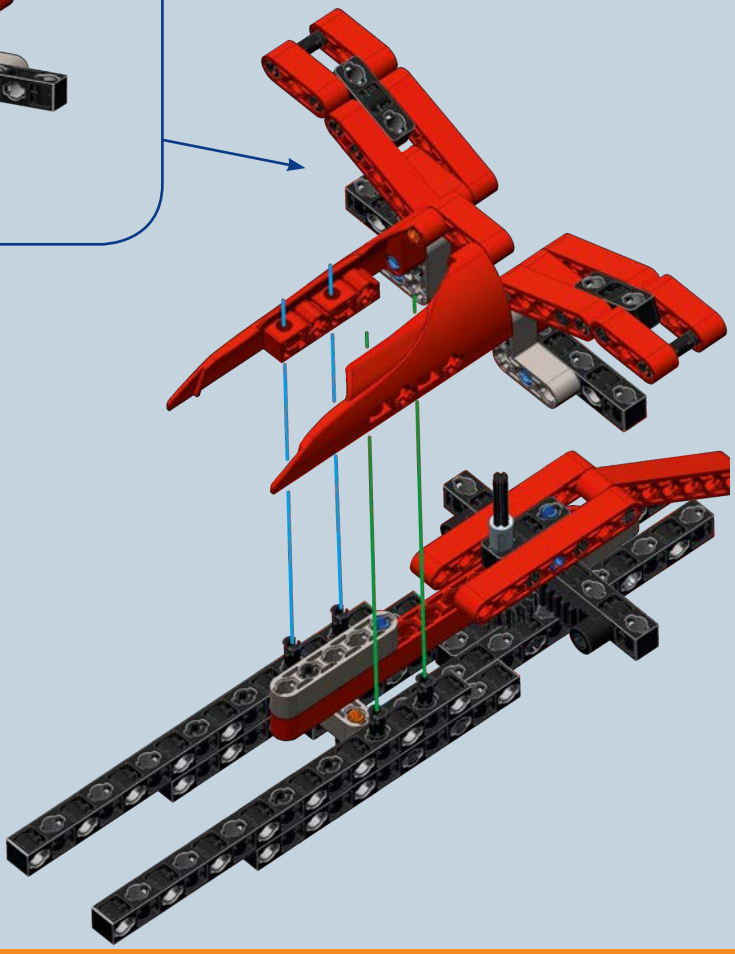

12

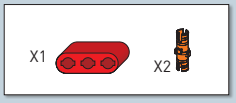

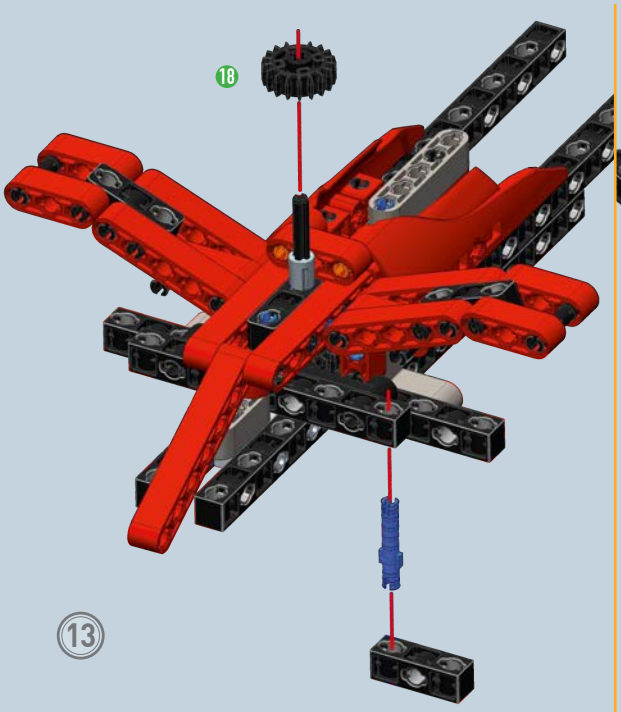
18
13

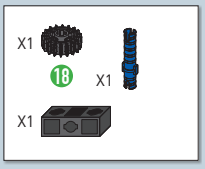
X1
18
X1
X1

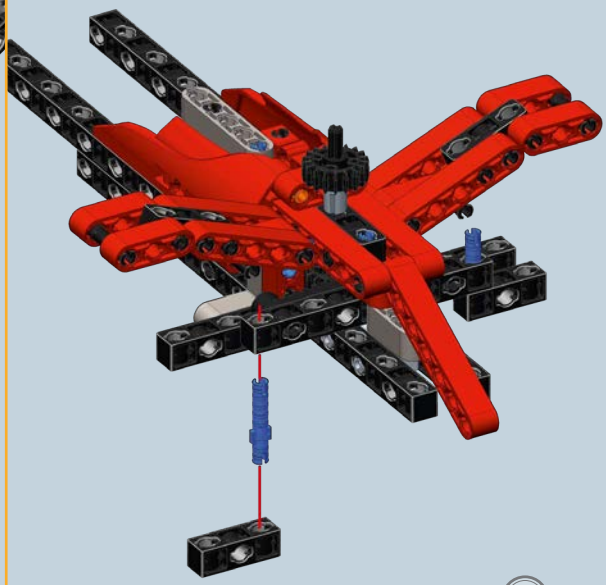
14

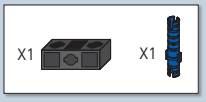
X1
X1

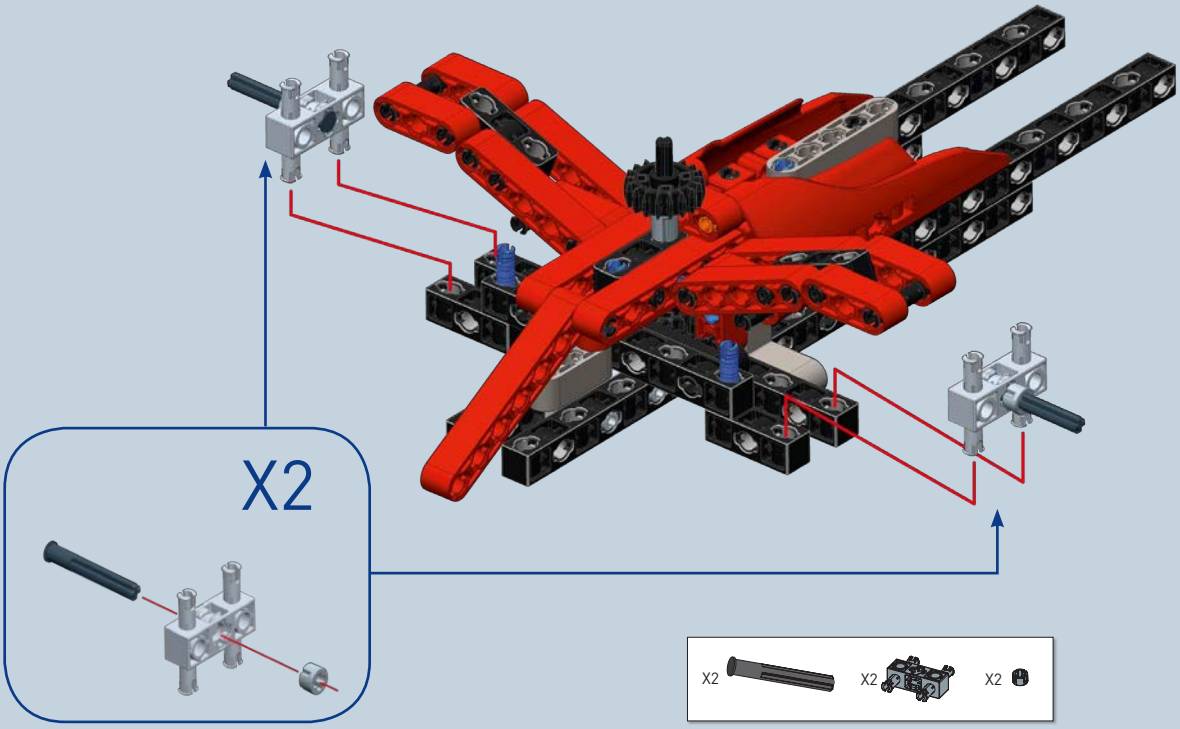
X2
X2
X2
X2

16

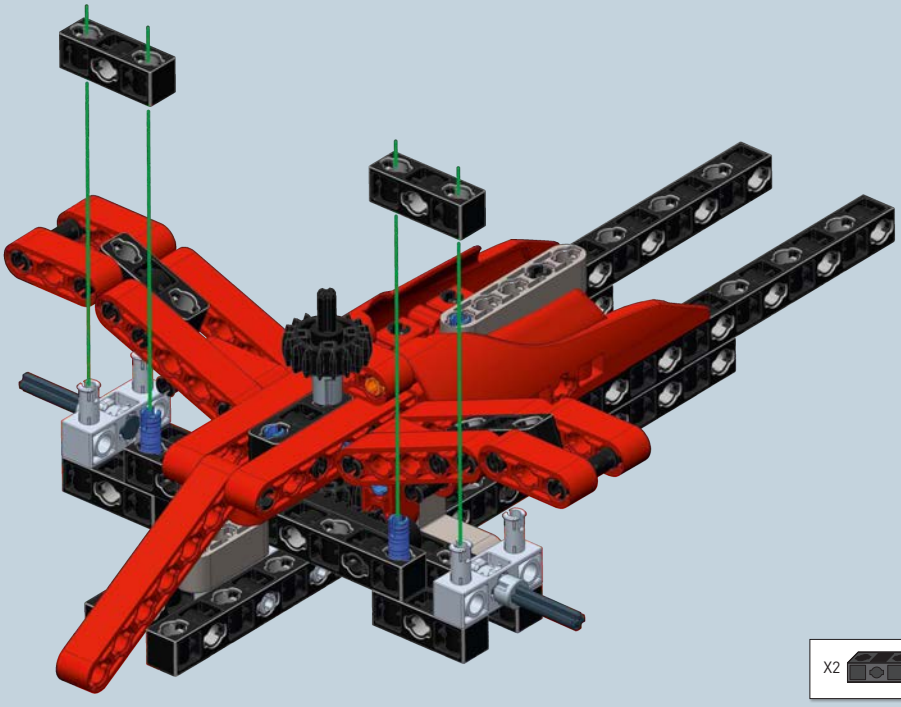

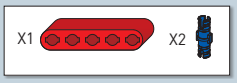

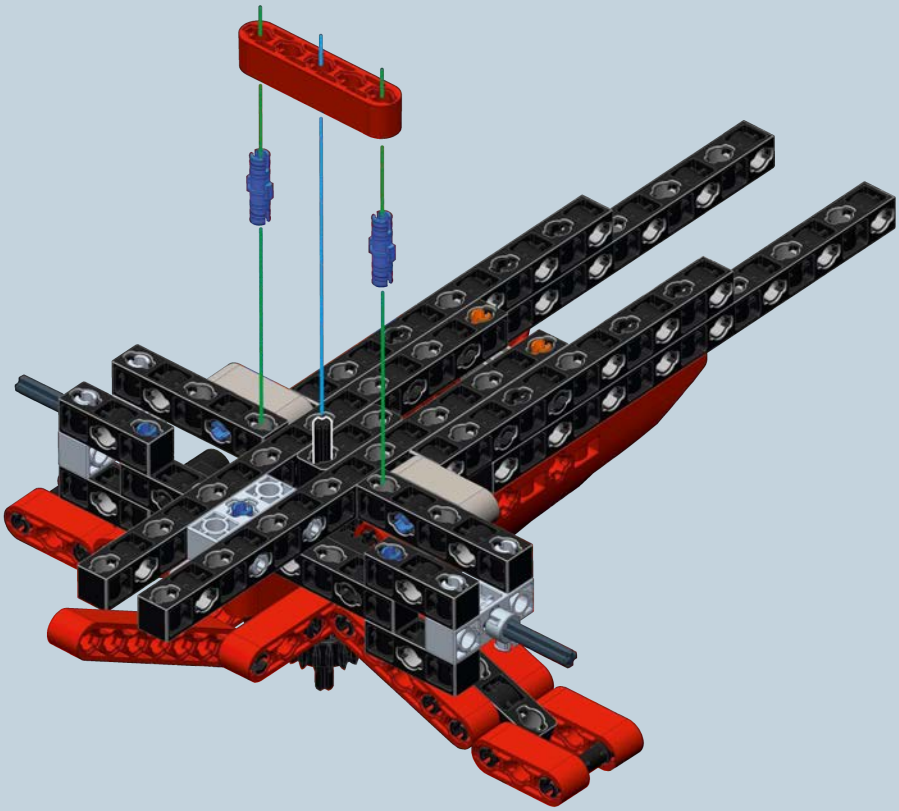

17

18

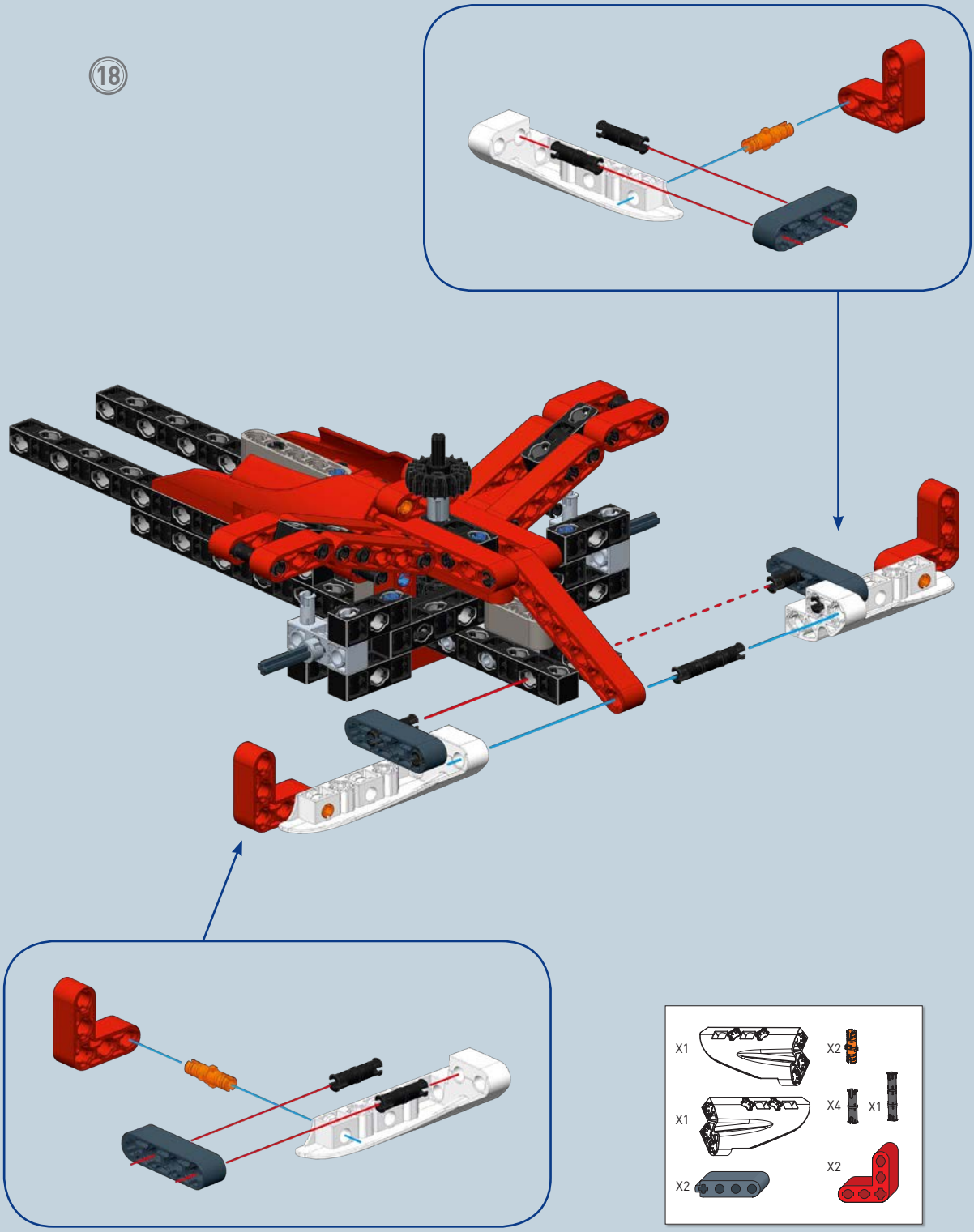

19

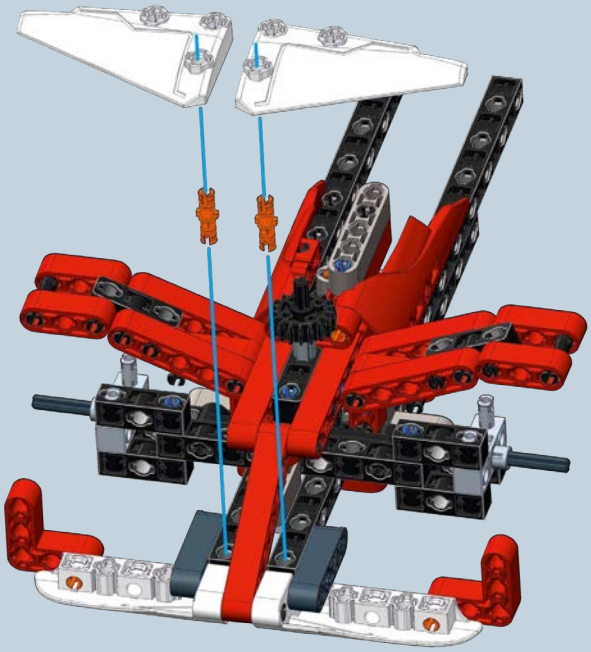

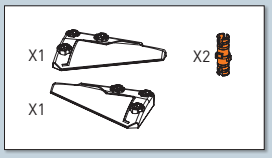

20

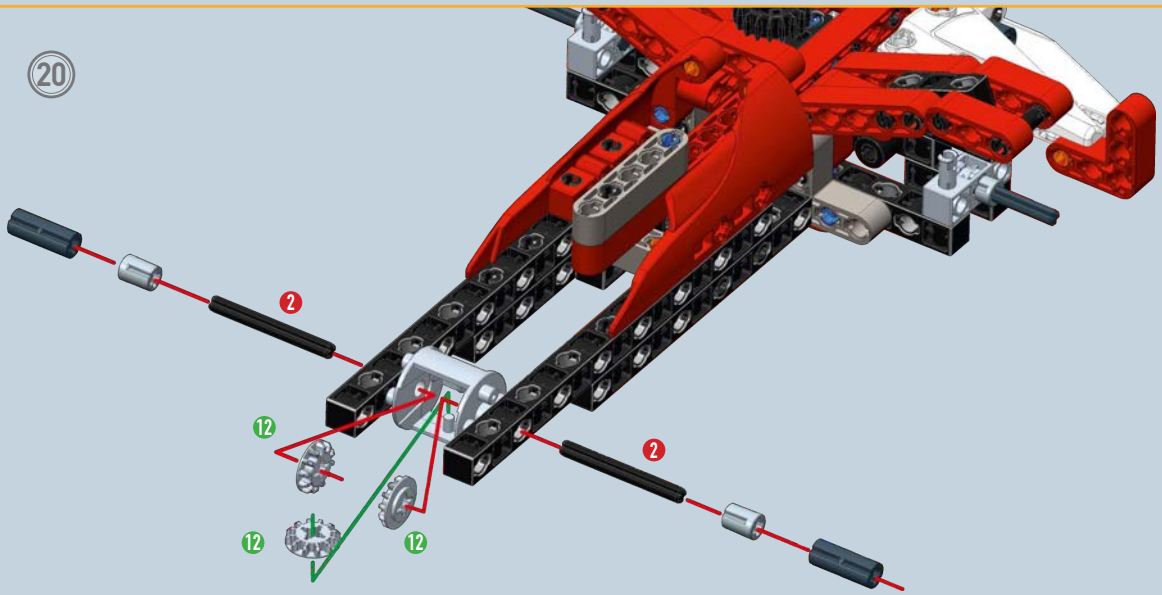

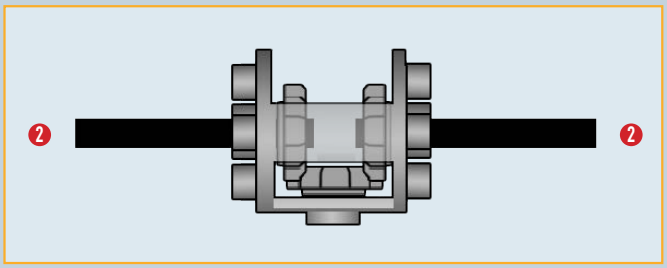

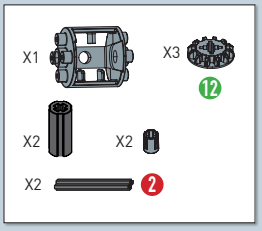

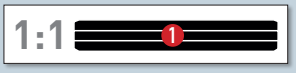

21

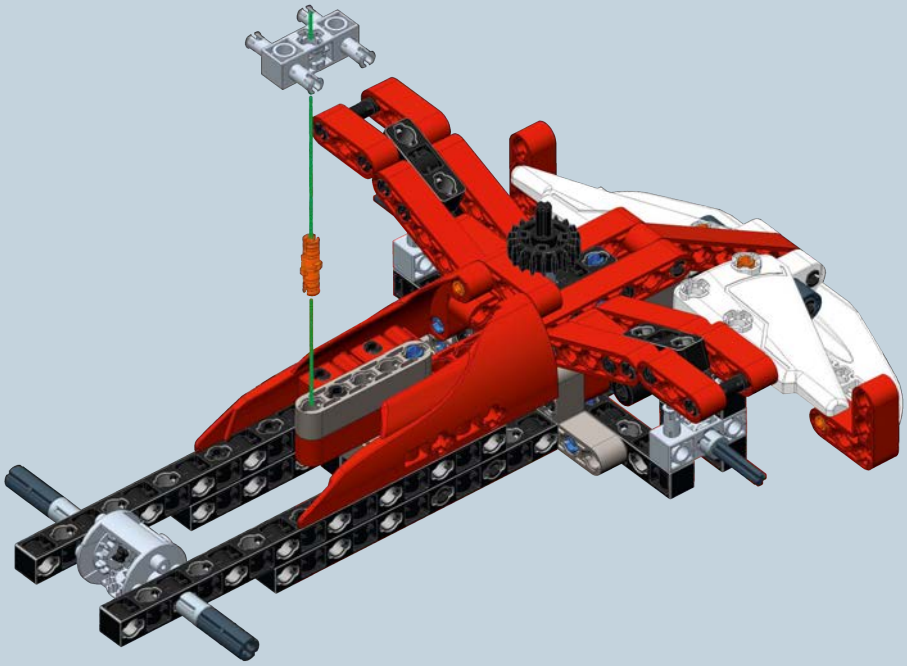

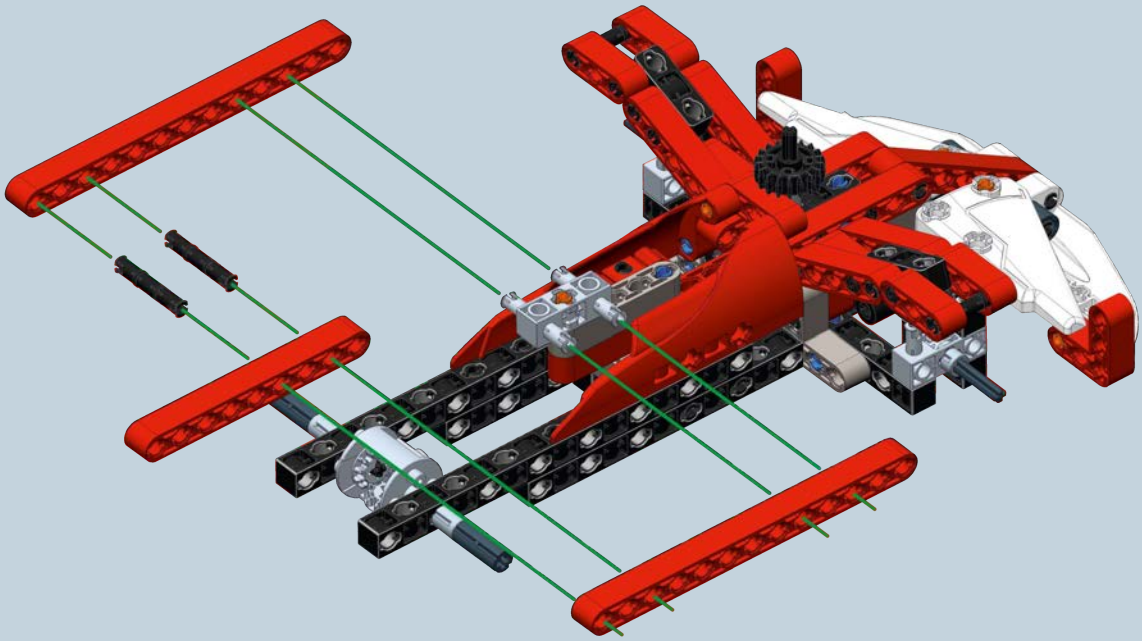

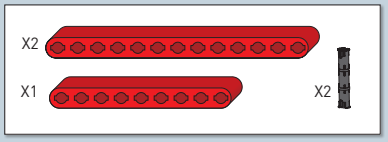

22

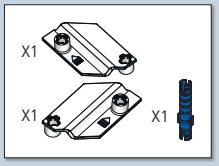

23

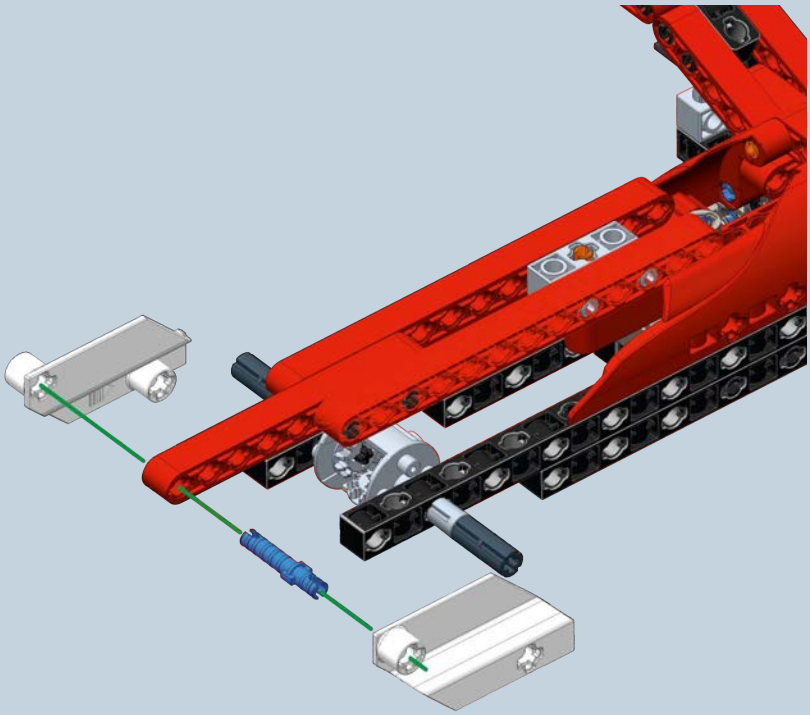

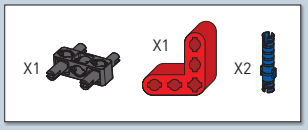

24

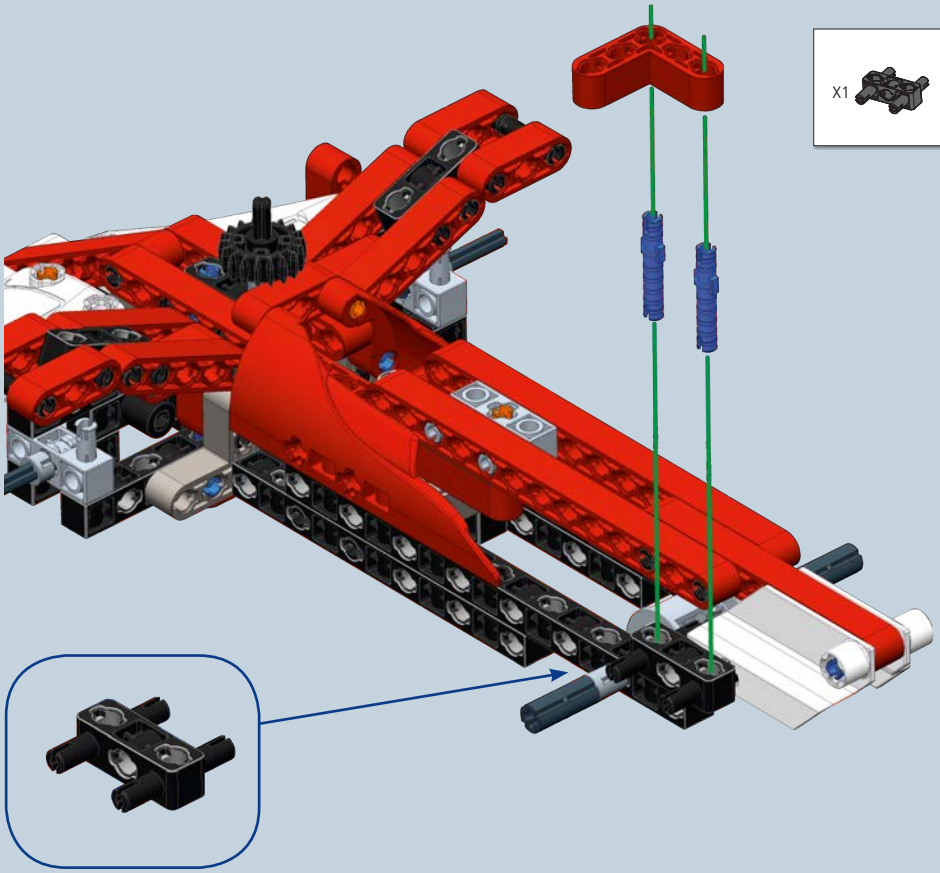

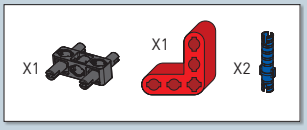

25

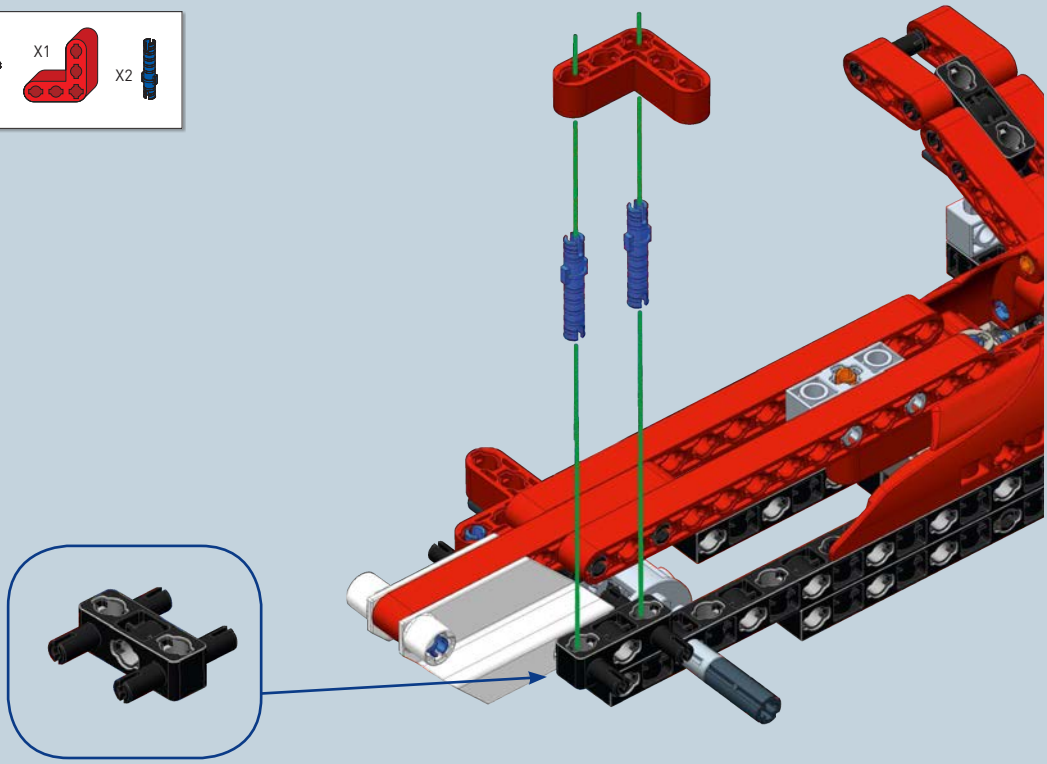

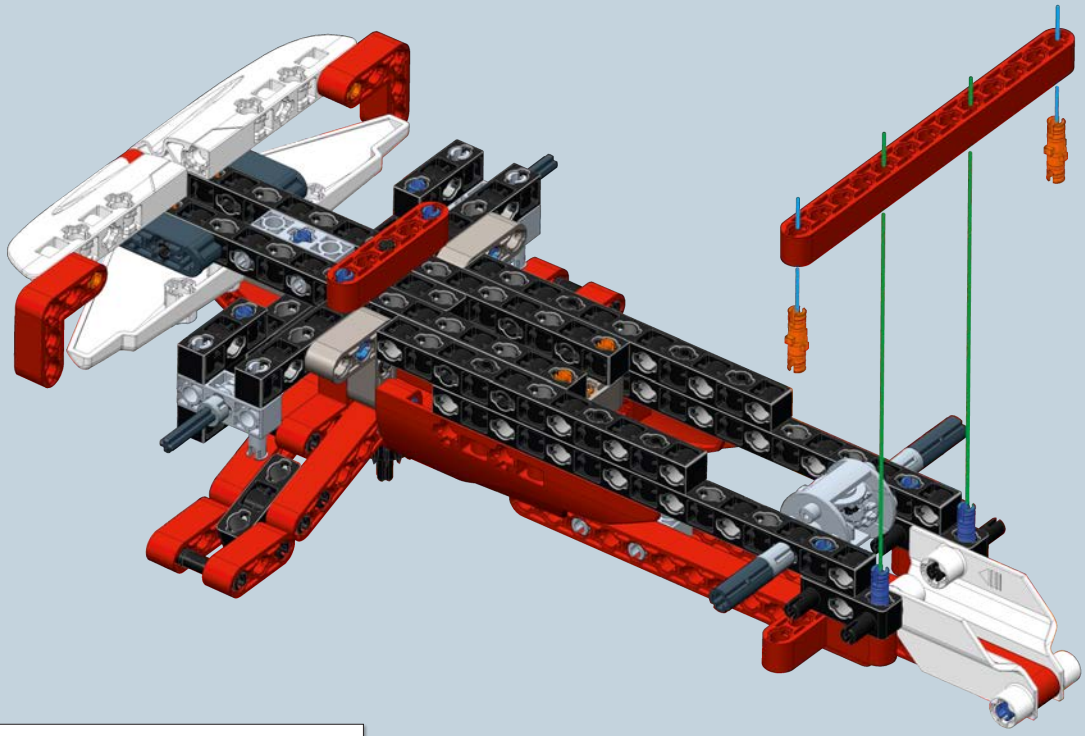

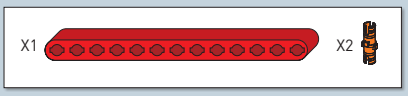

26

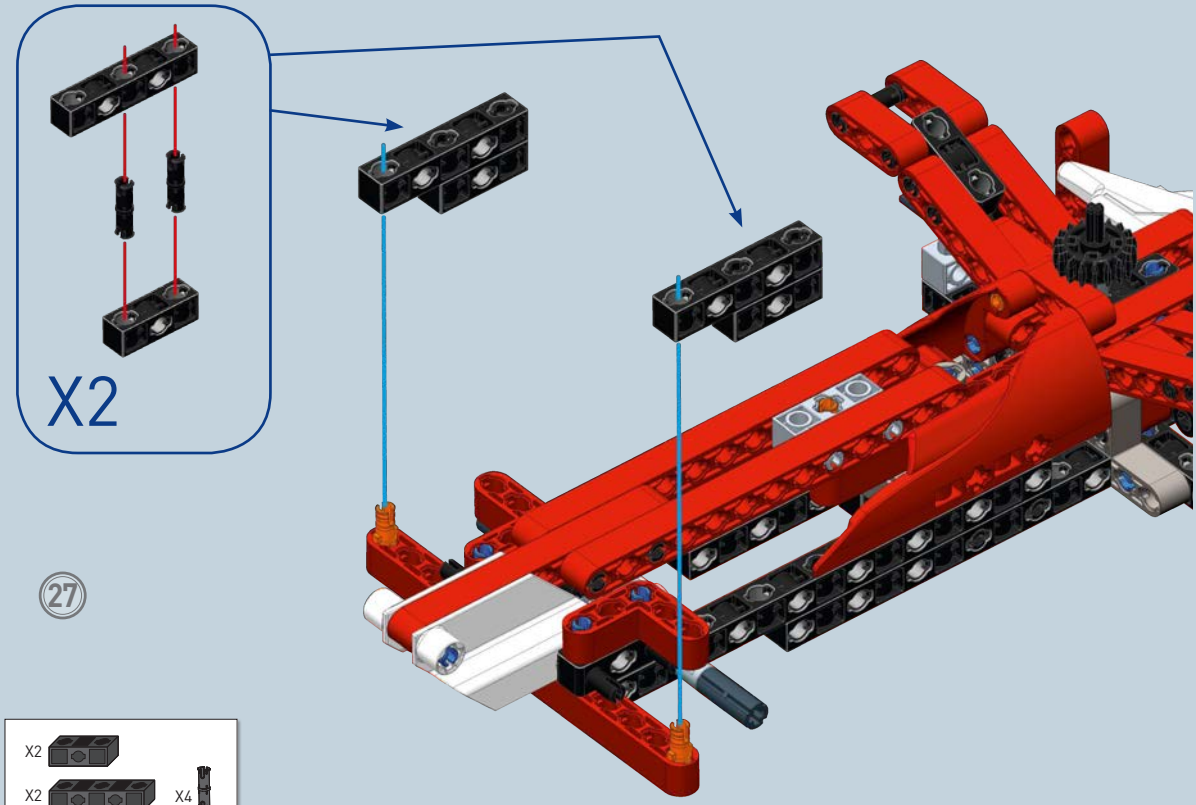

27

X2
X2
X4

28

X2
X2 2

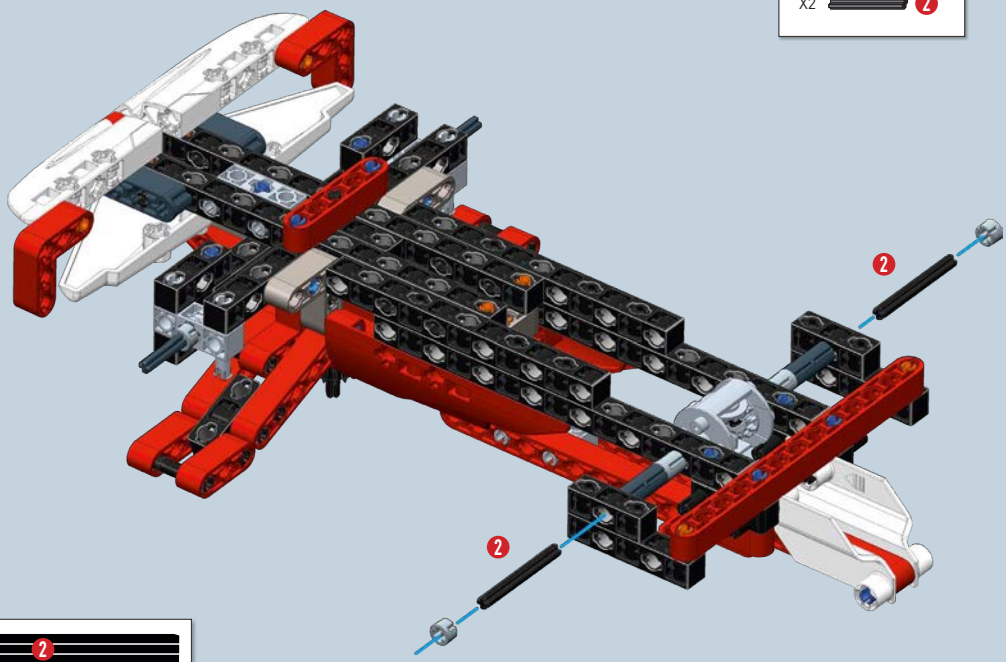

1:1 2

29

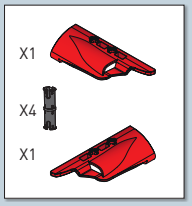

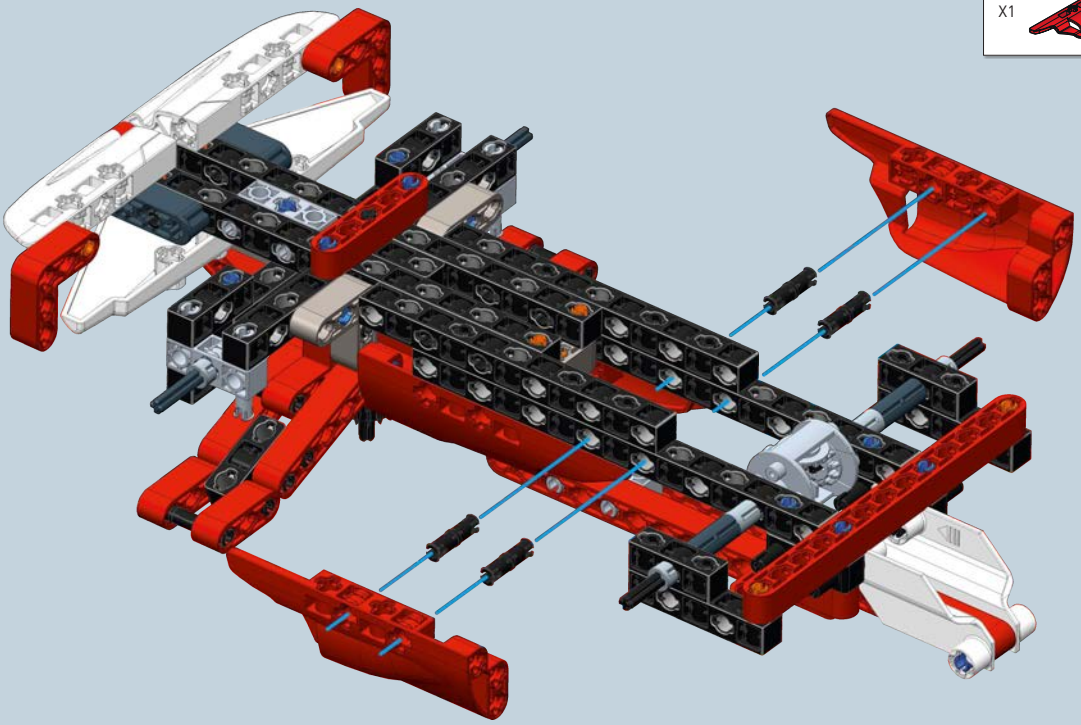

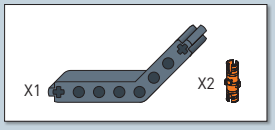

30

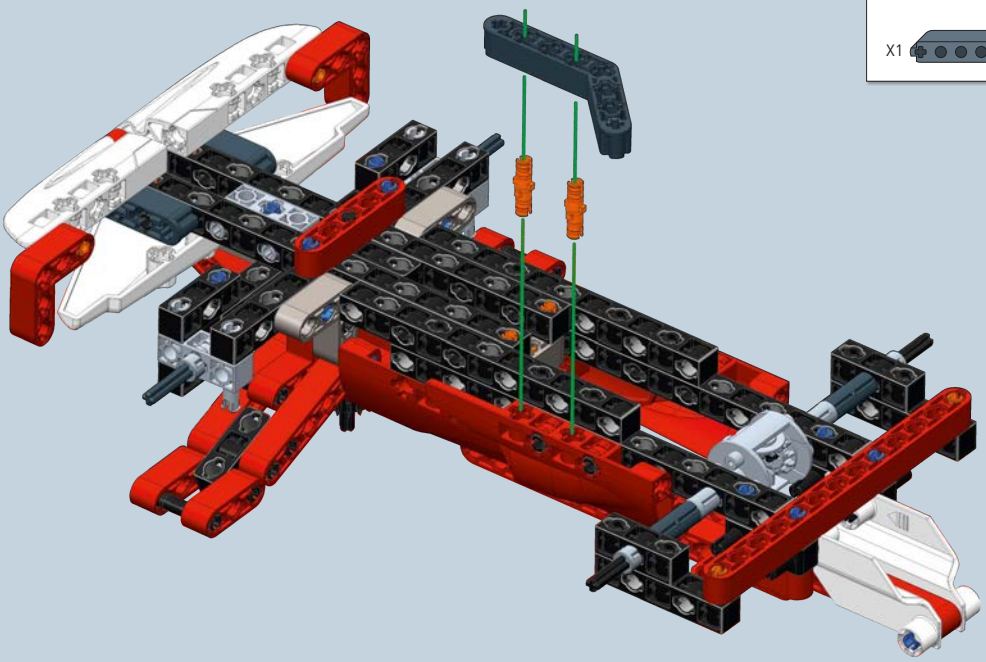

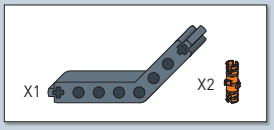

31

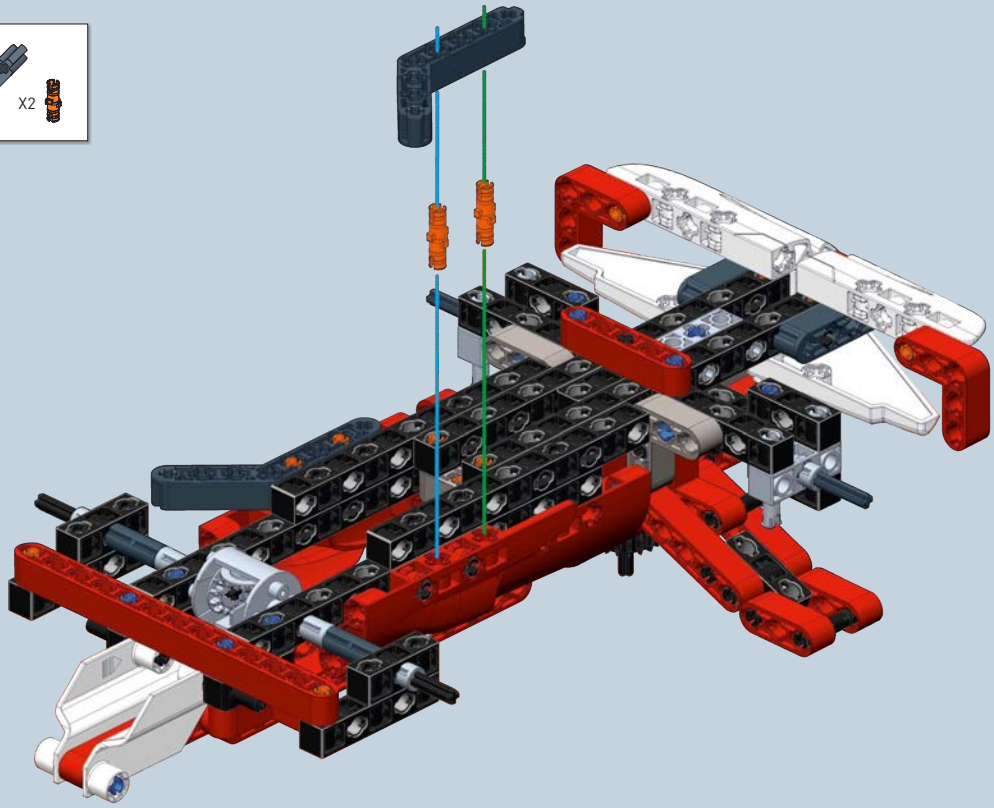

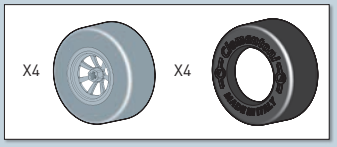

32

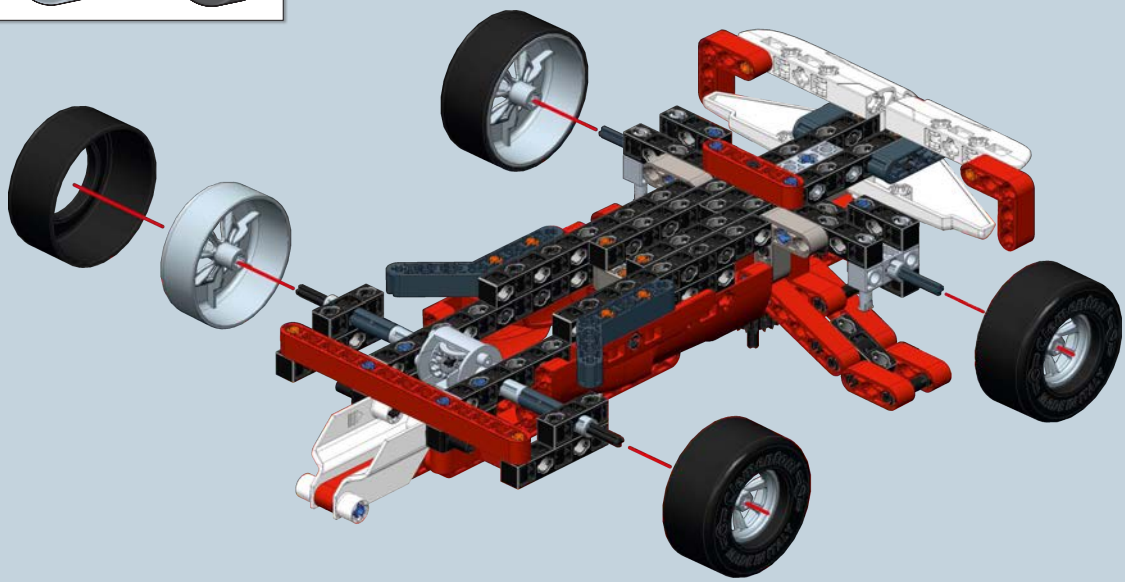

33

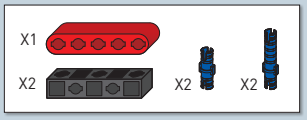

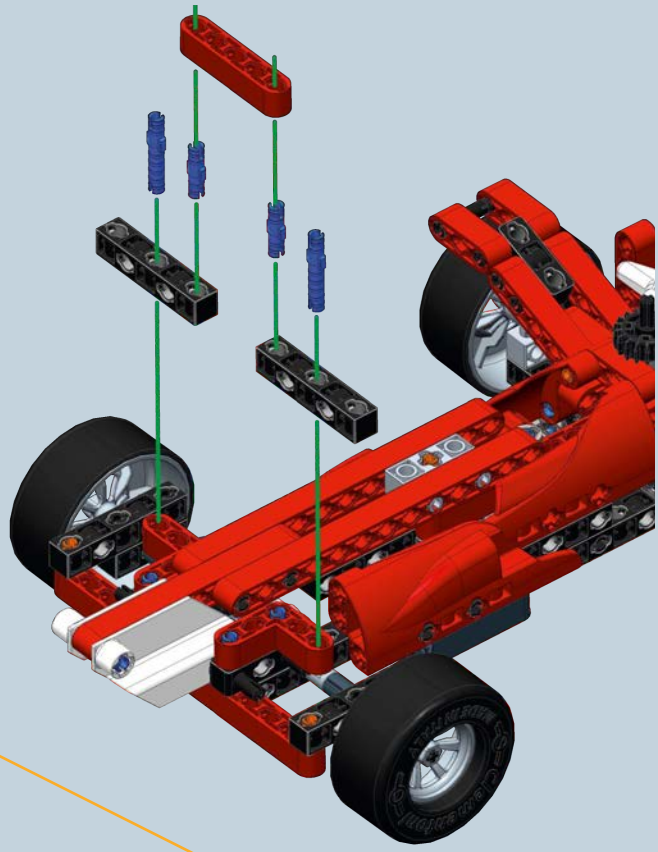

34

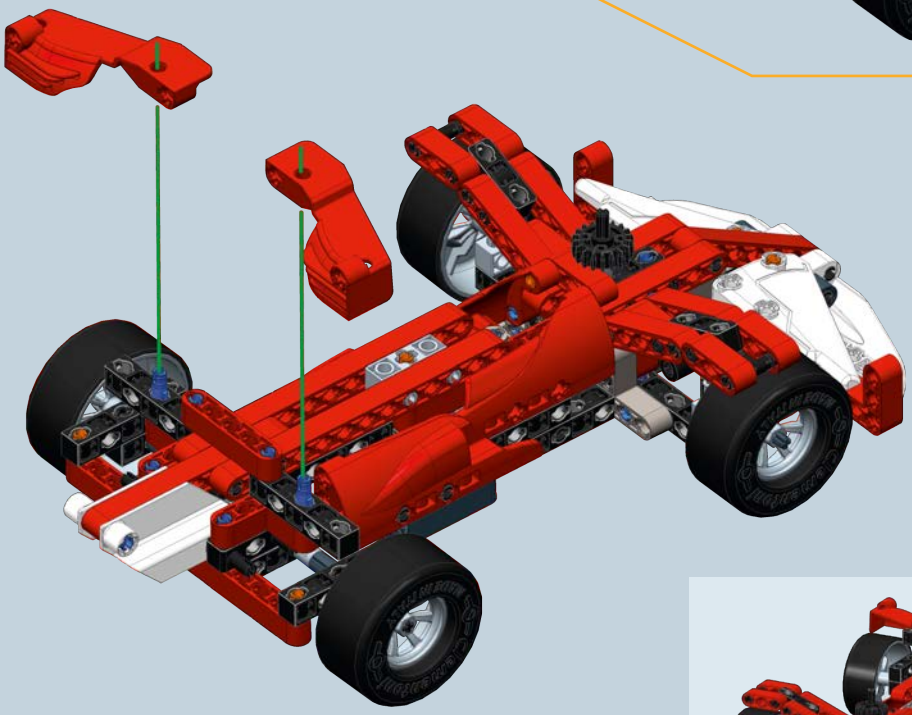

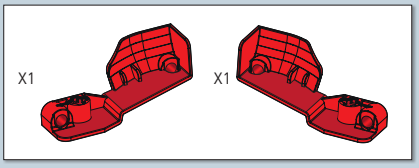

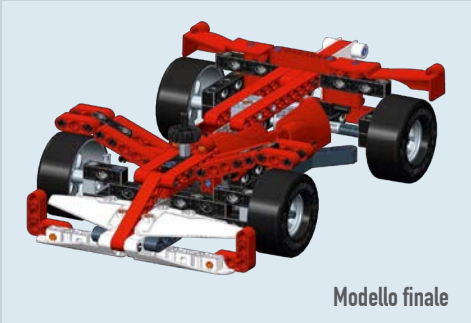
Modello finale

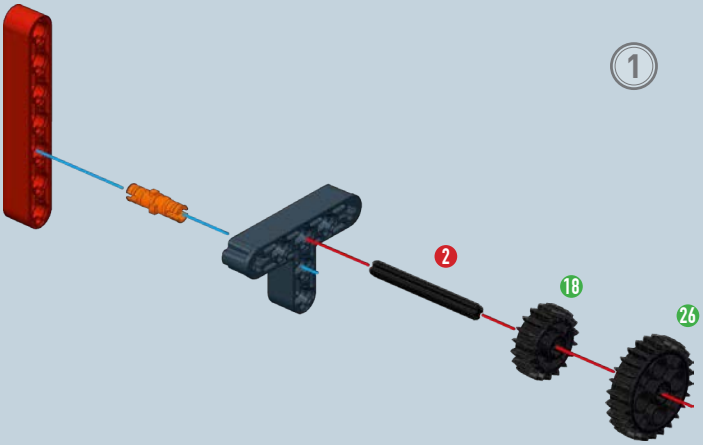
1
2
18
26

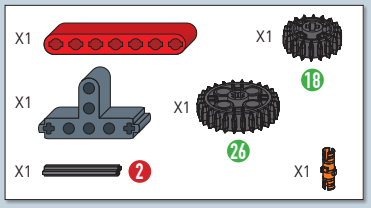
X1
X1
18
X1
X1
26
X1
2
X1

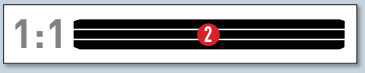
1:1
2

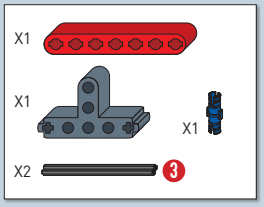
X1
X1
X1
X2
3

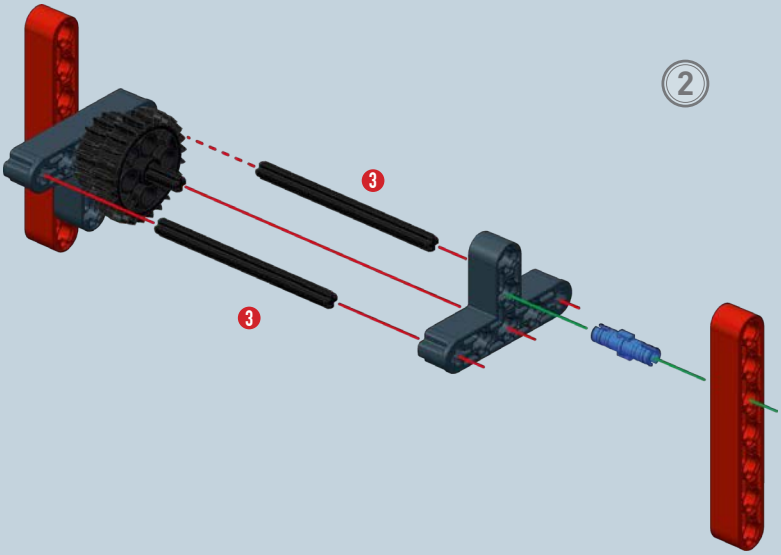
2
3
3

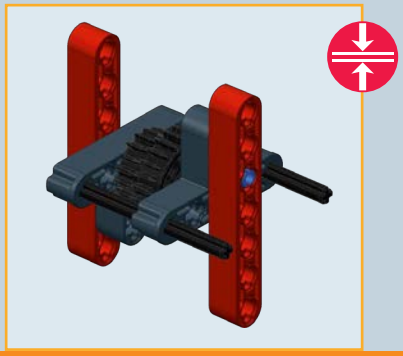

1:1
3

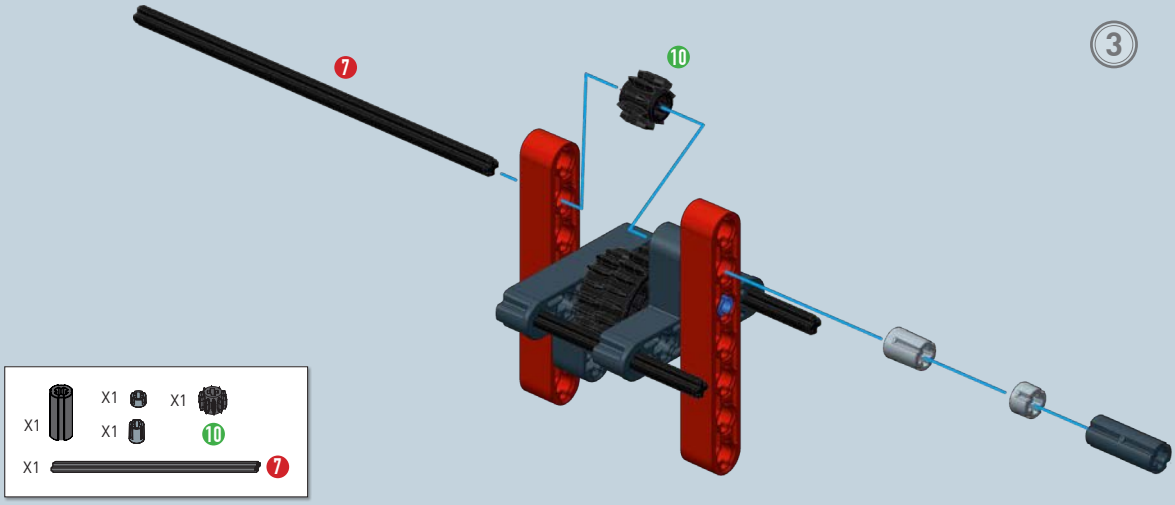
3
7
10
X1
X1
X1
X1
X1
10
7

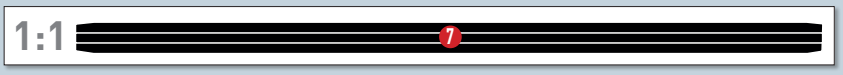
1:1
7

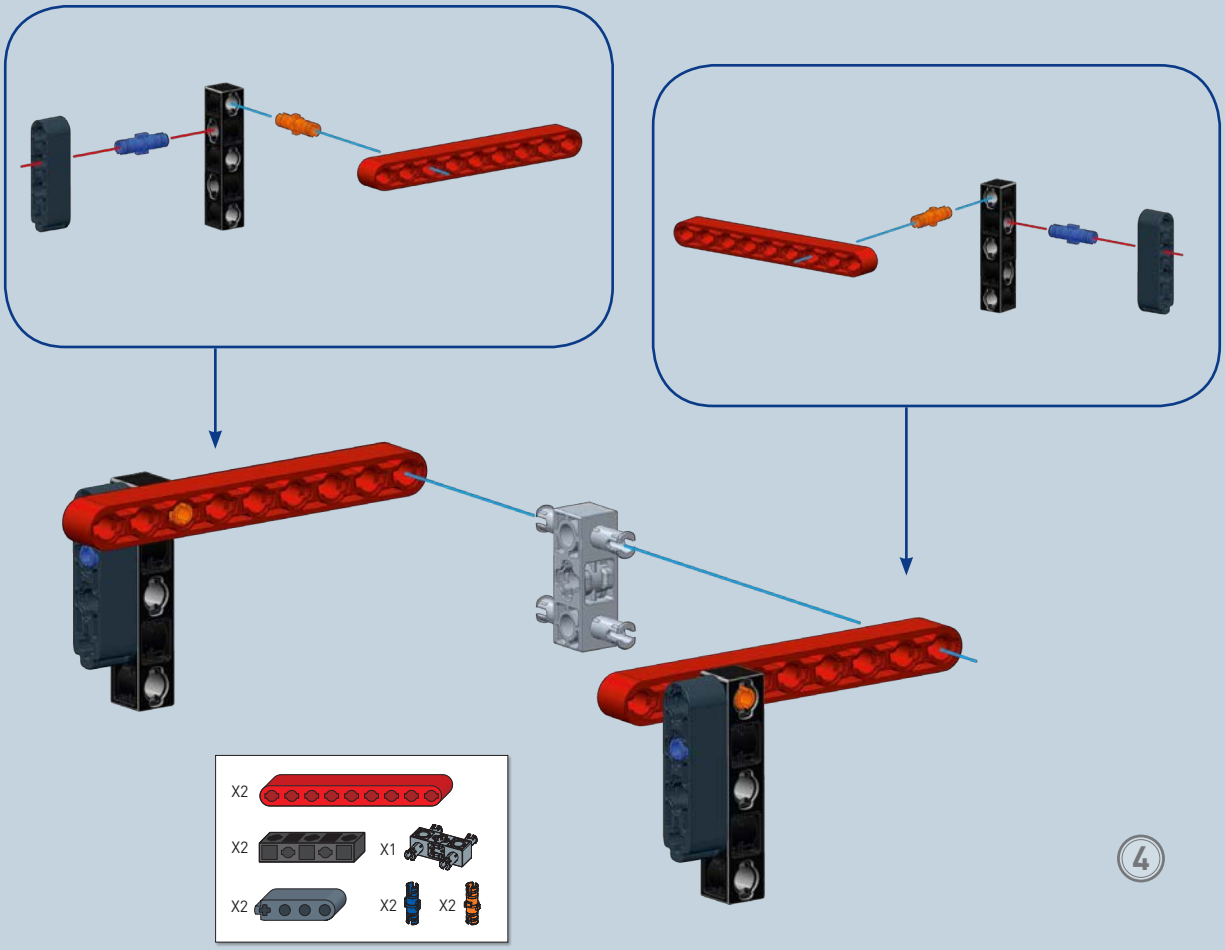
X2
X2
X1
X2
X2
X2
4

5

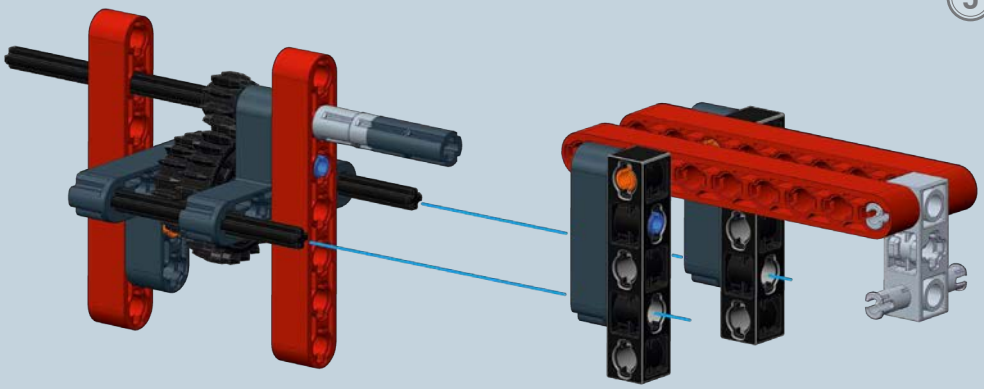

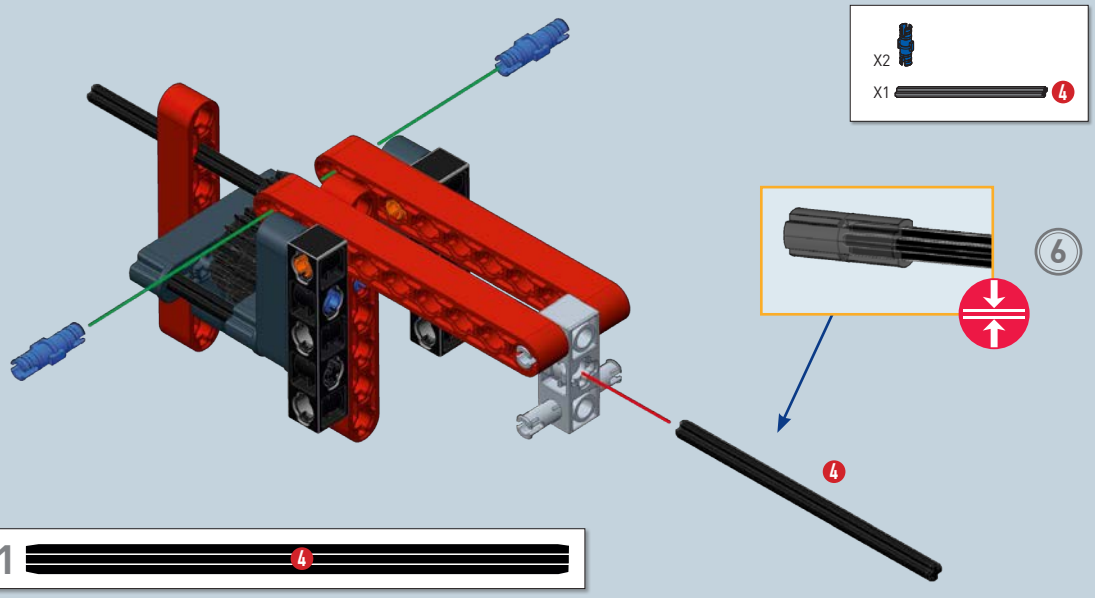

7

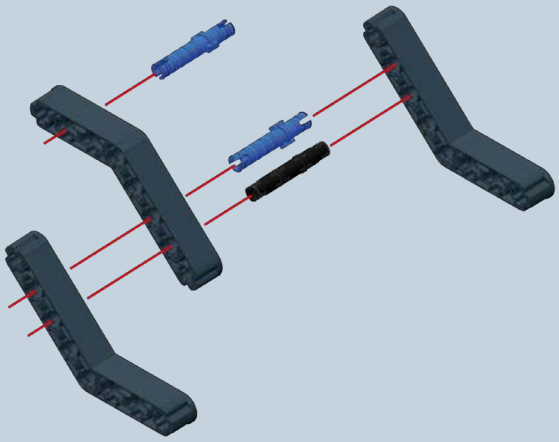

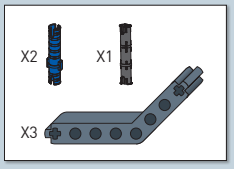

8

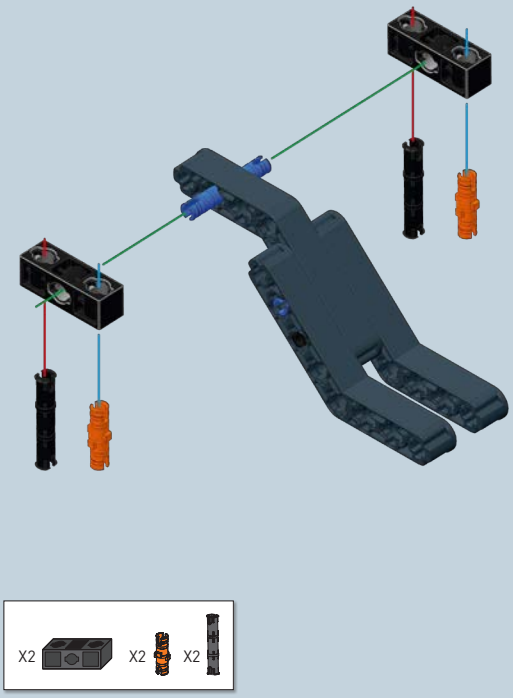

9

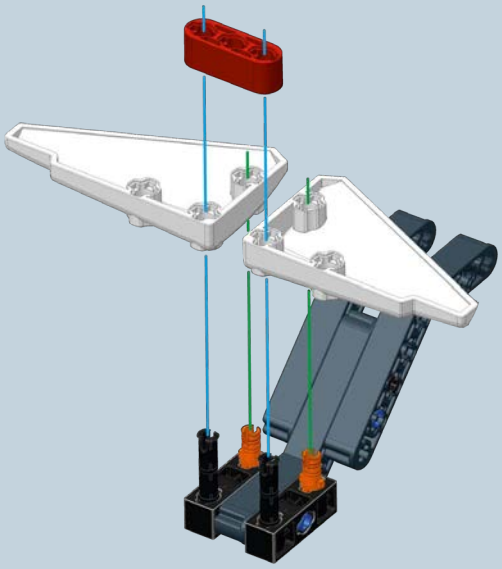

10

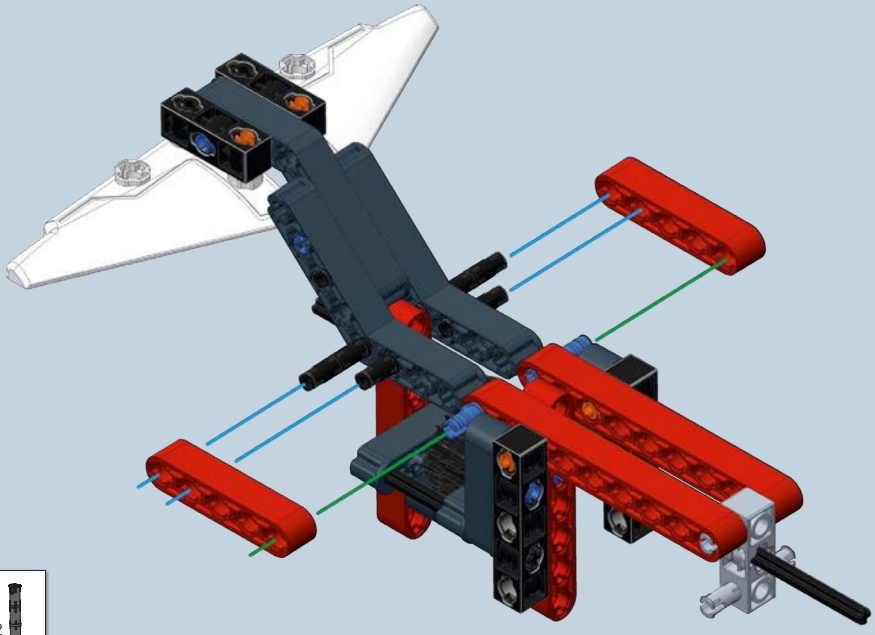

11

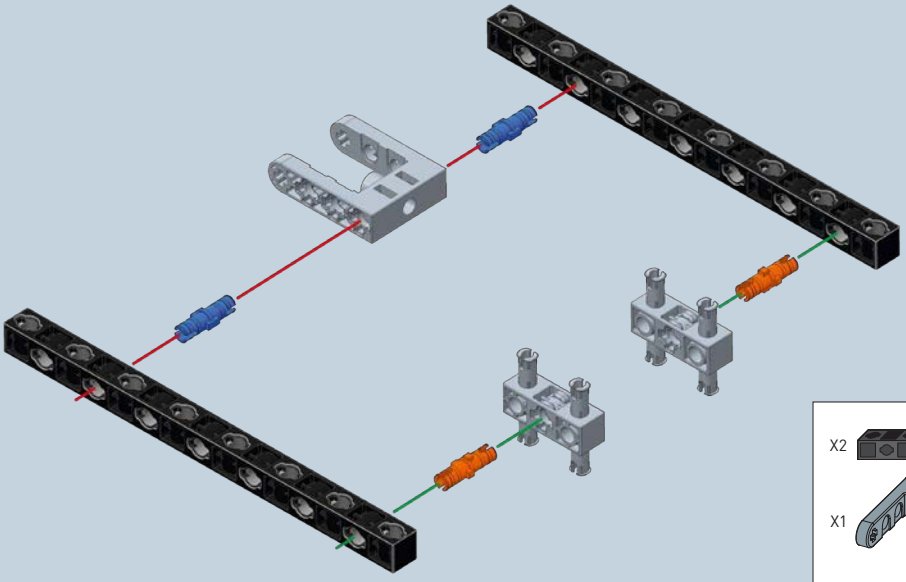

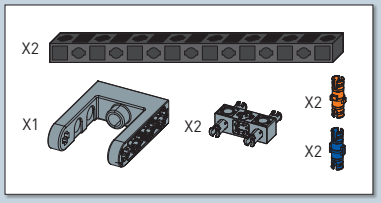

12

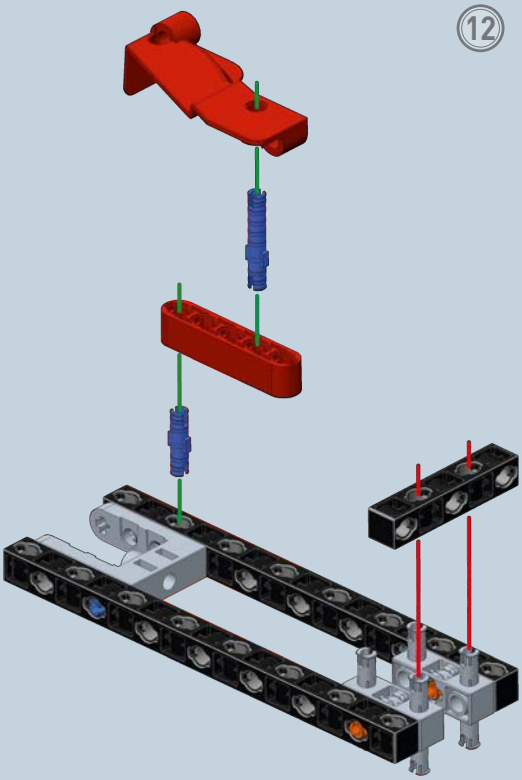

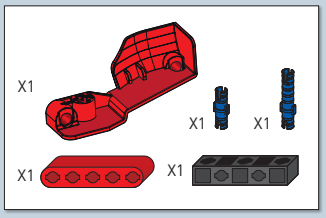

13

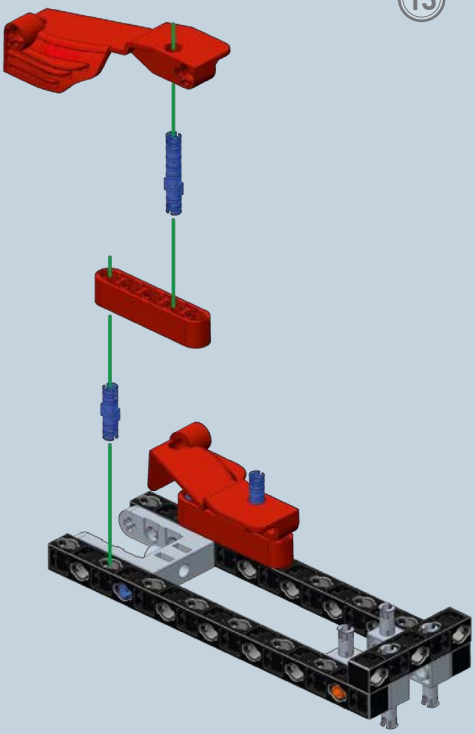

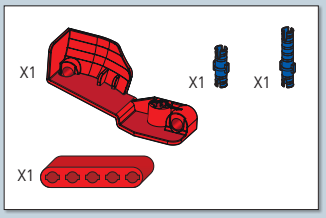

14

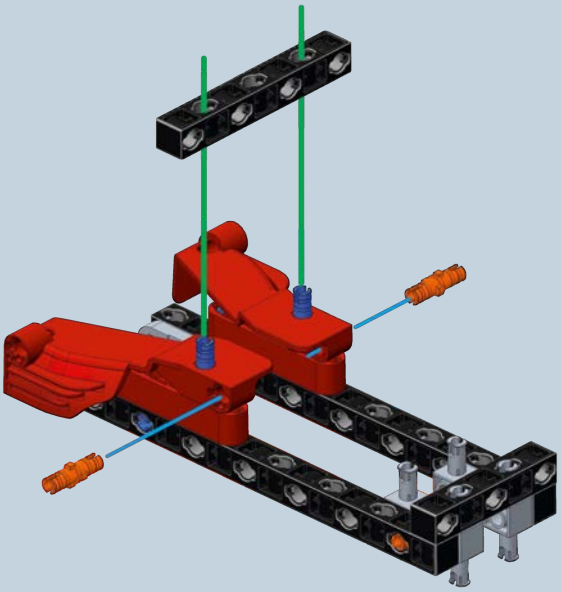

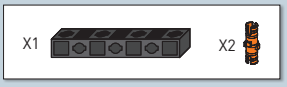

15

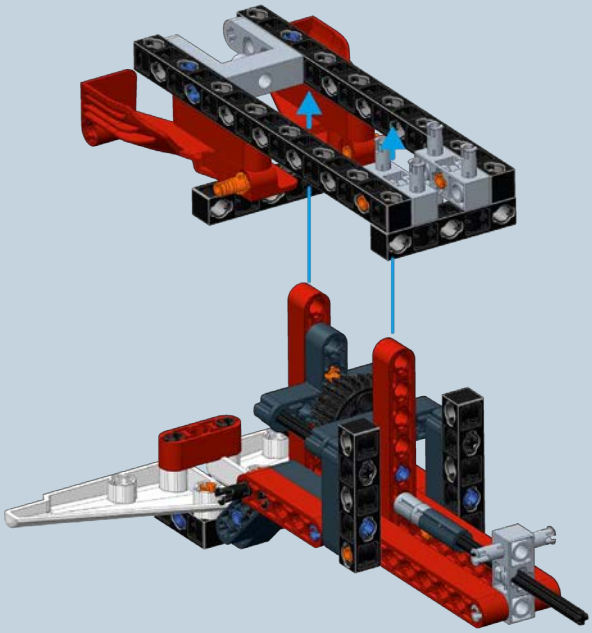

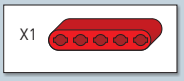

16

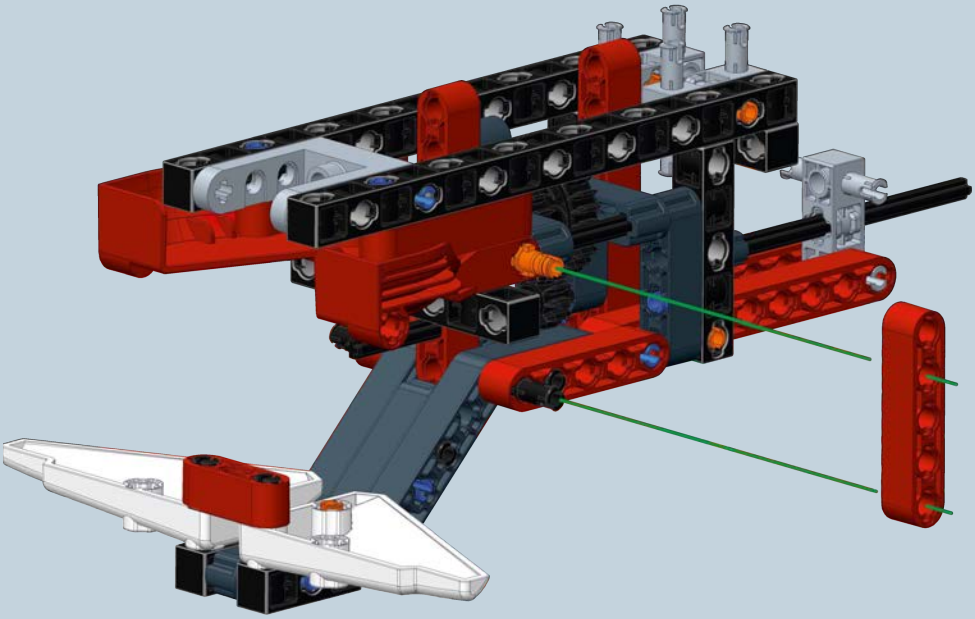

17

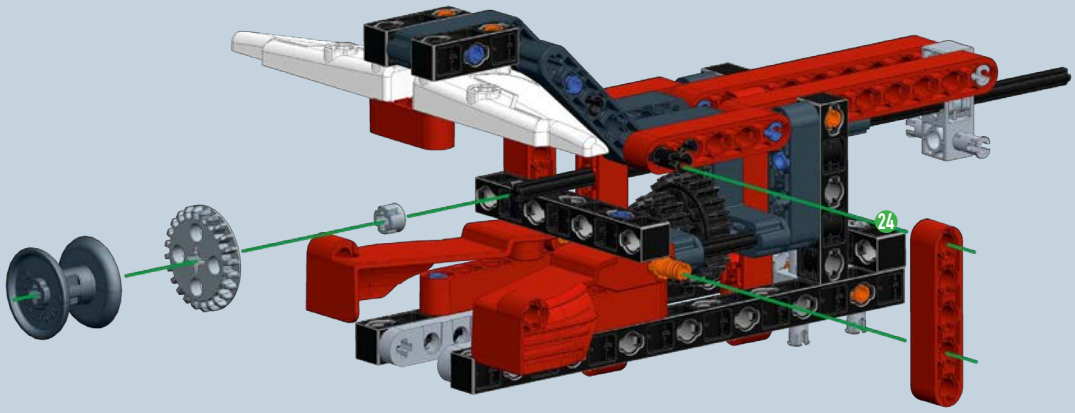

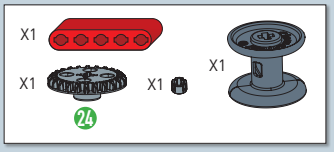

18

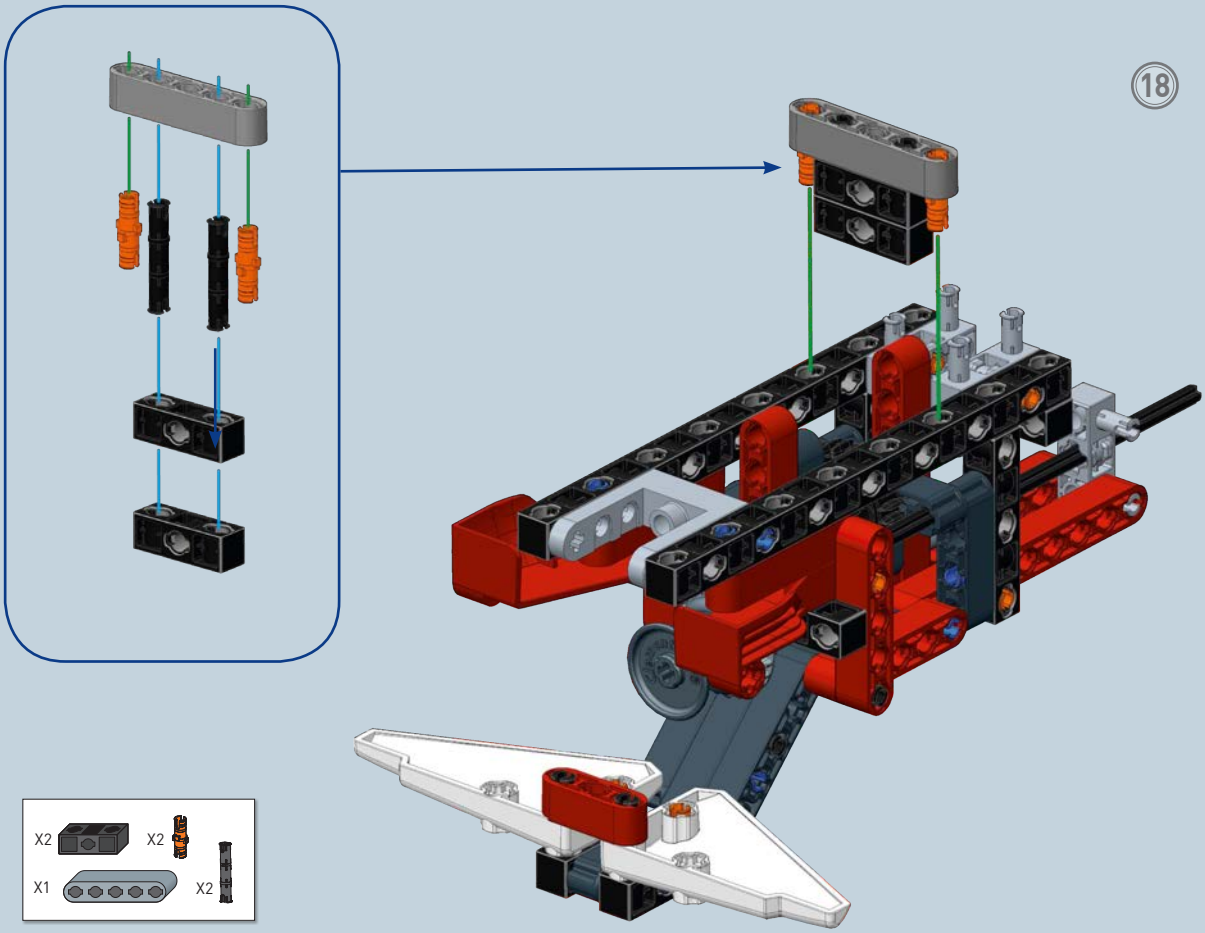

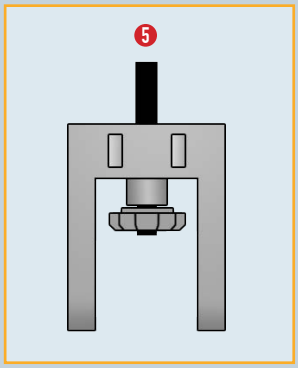

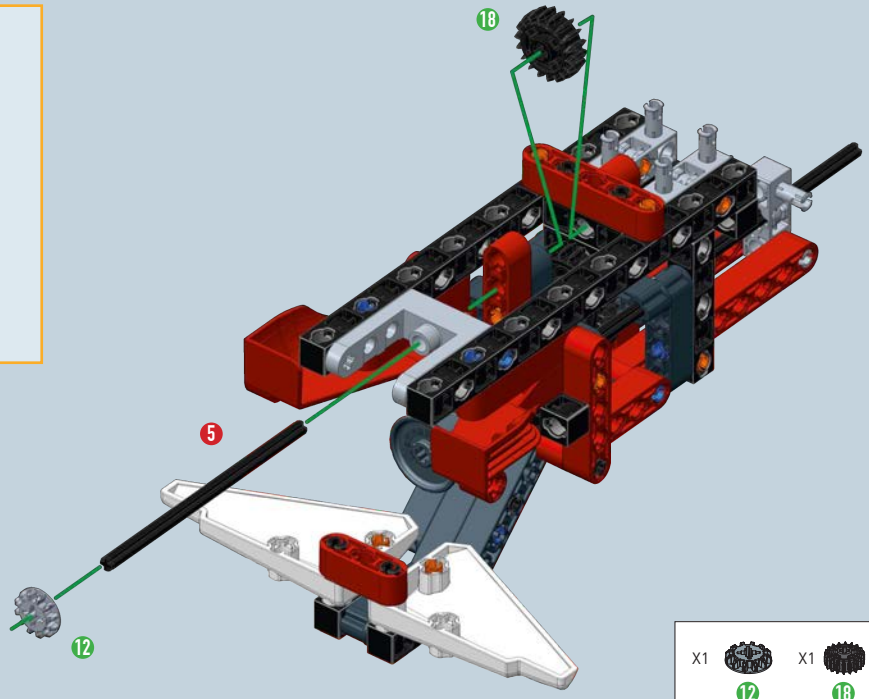

19

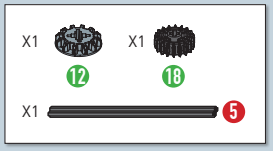

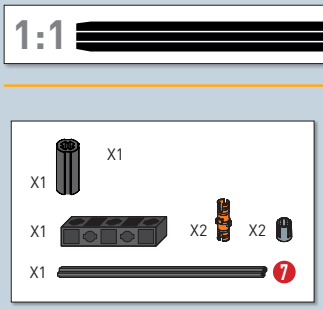

20

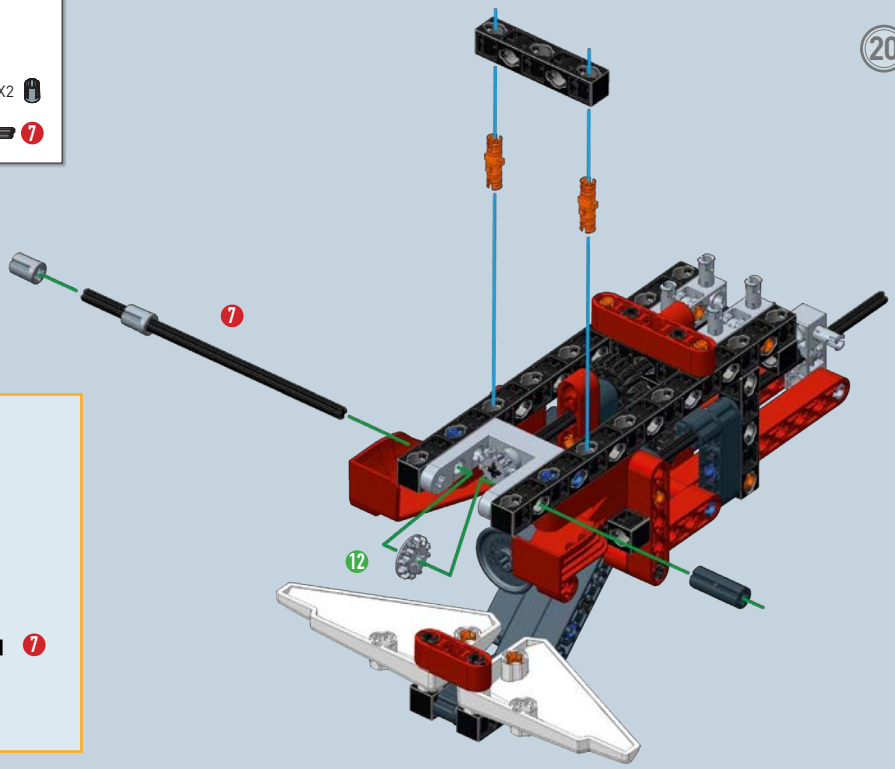

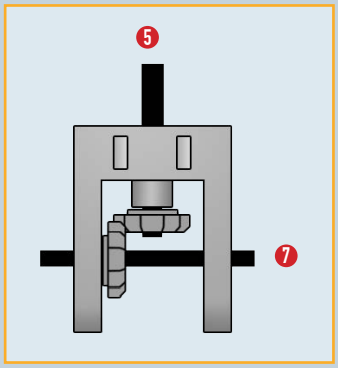

1:1 7

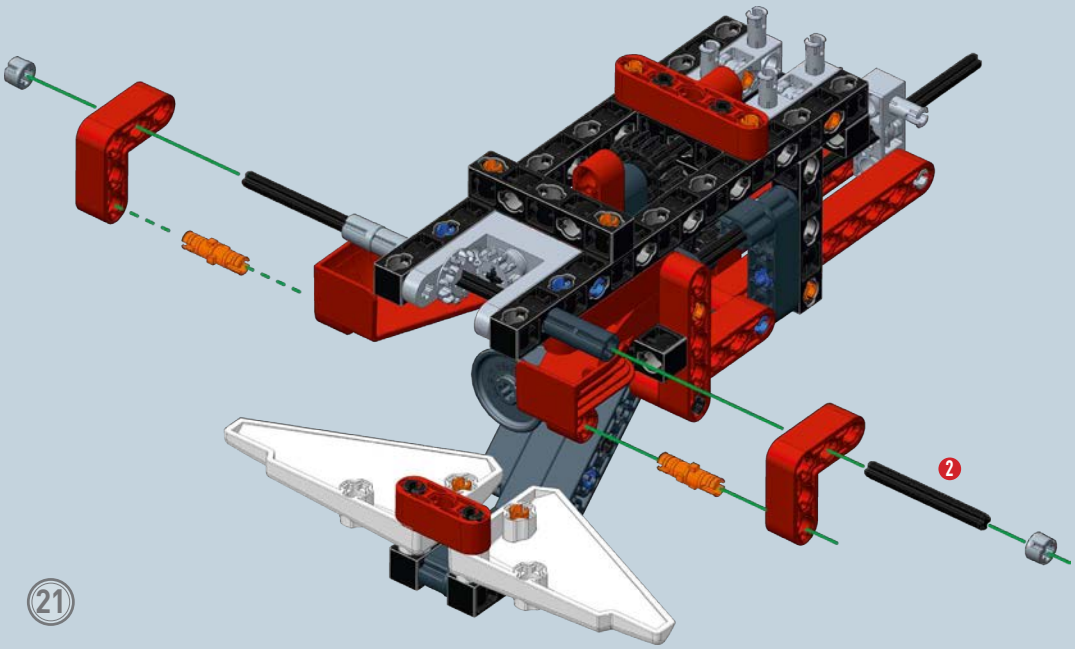

21

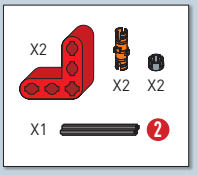

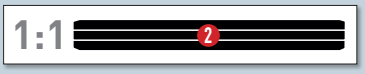

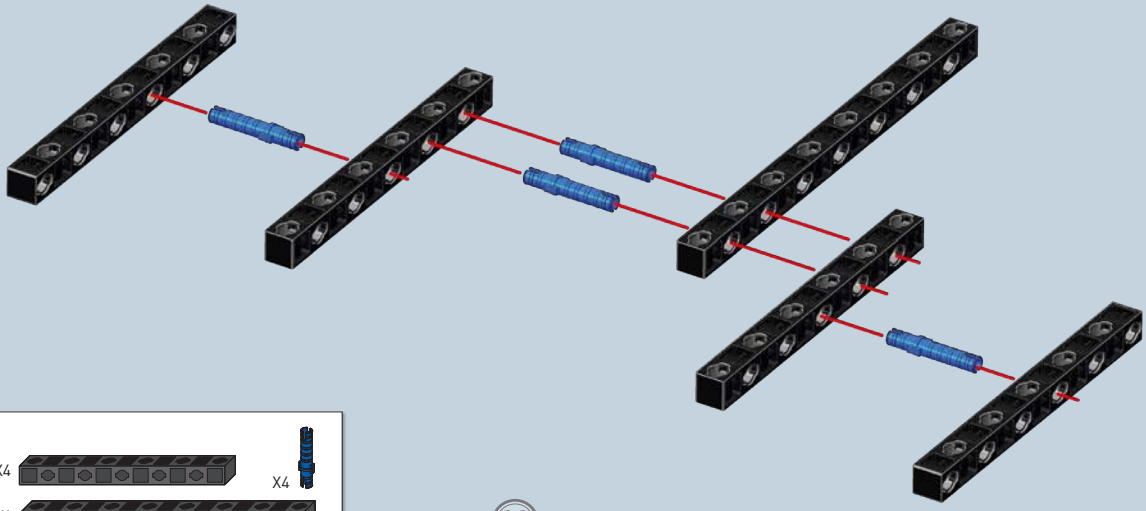

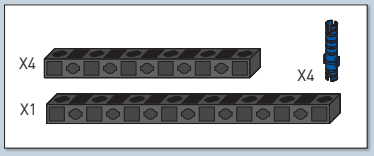

22

23

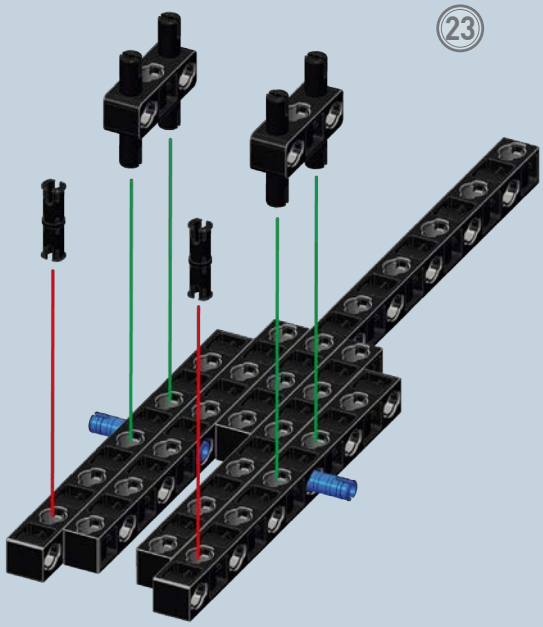

X2 X2

24

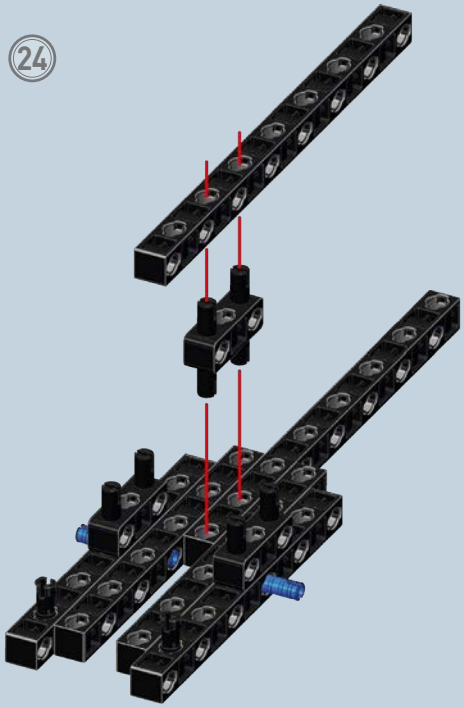

X1

X1

25

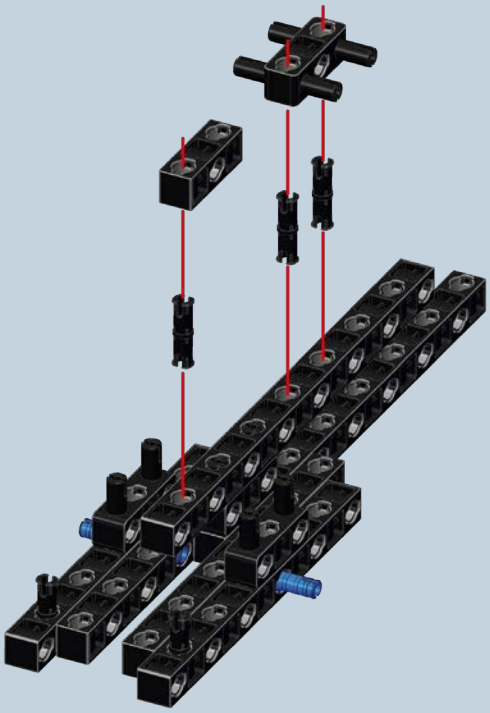

X1 X3 X1

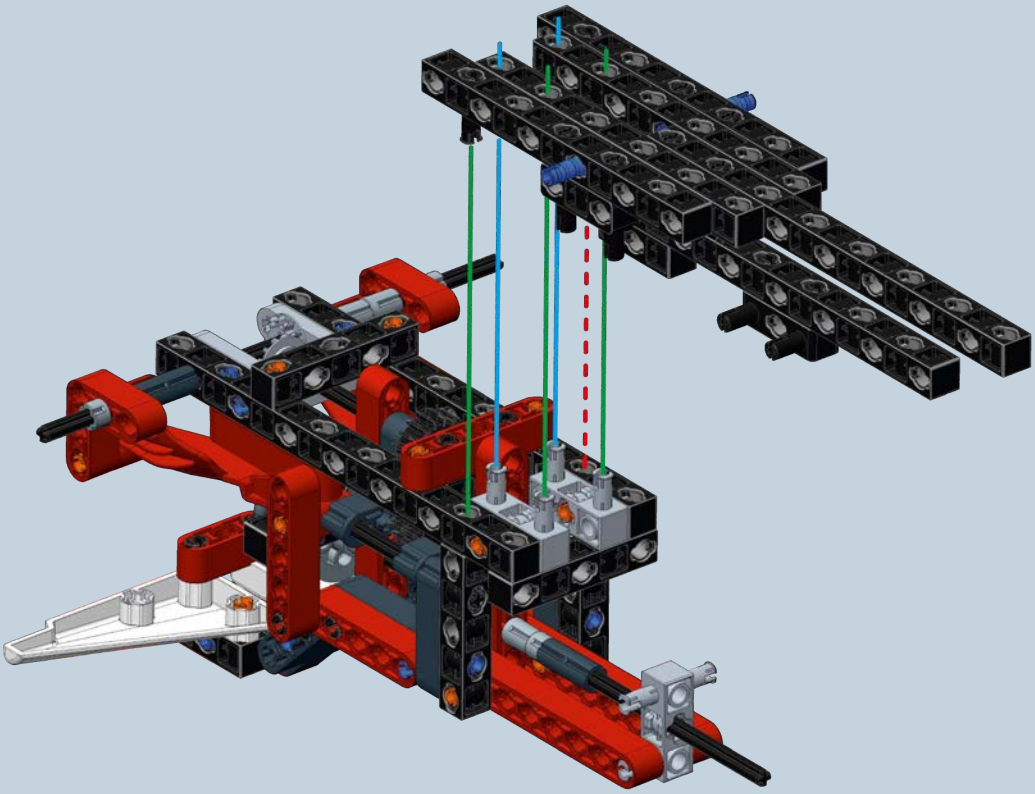

26

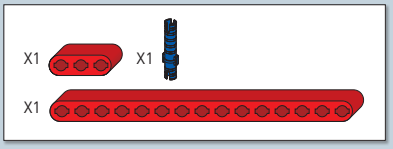

27

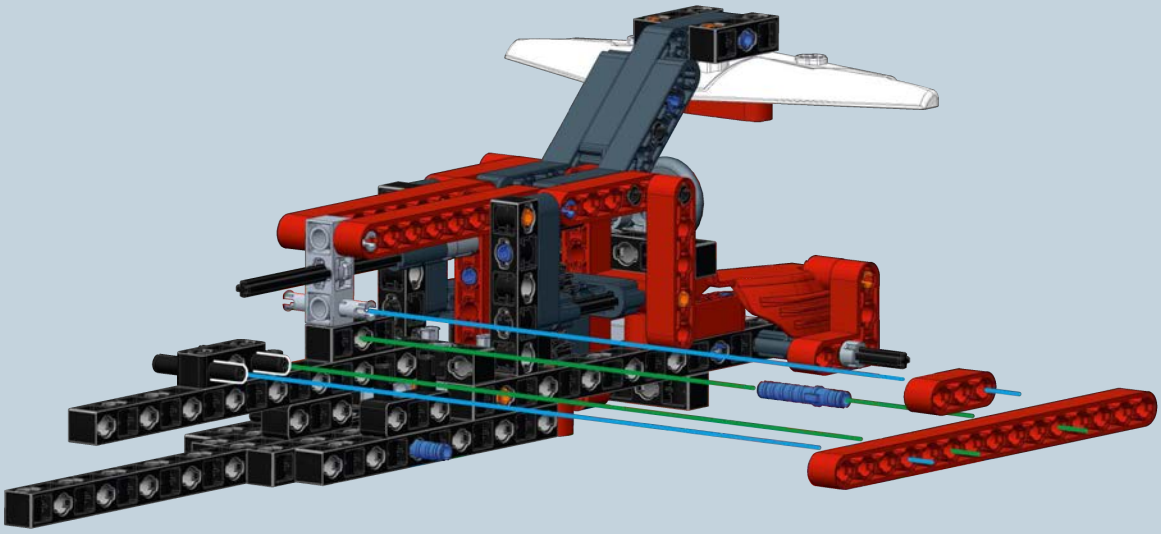

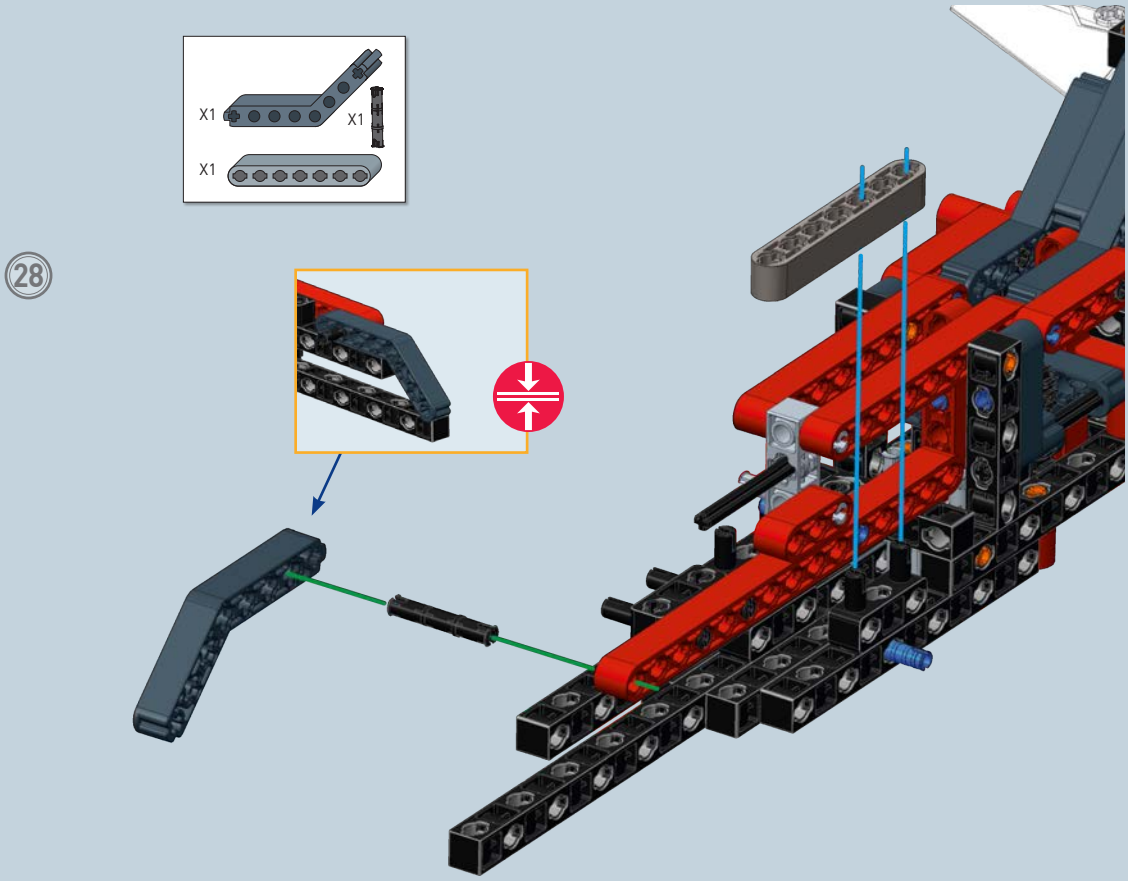
X1
X1
X1
28

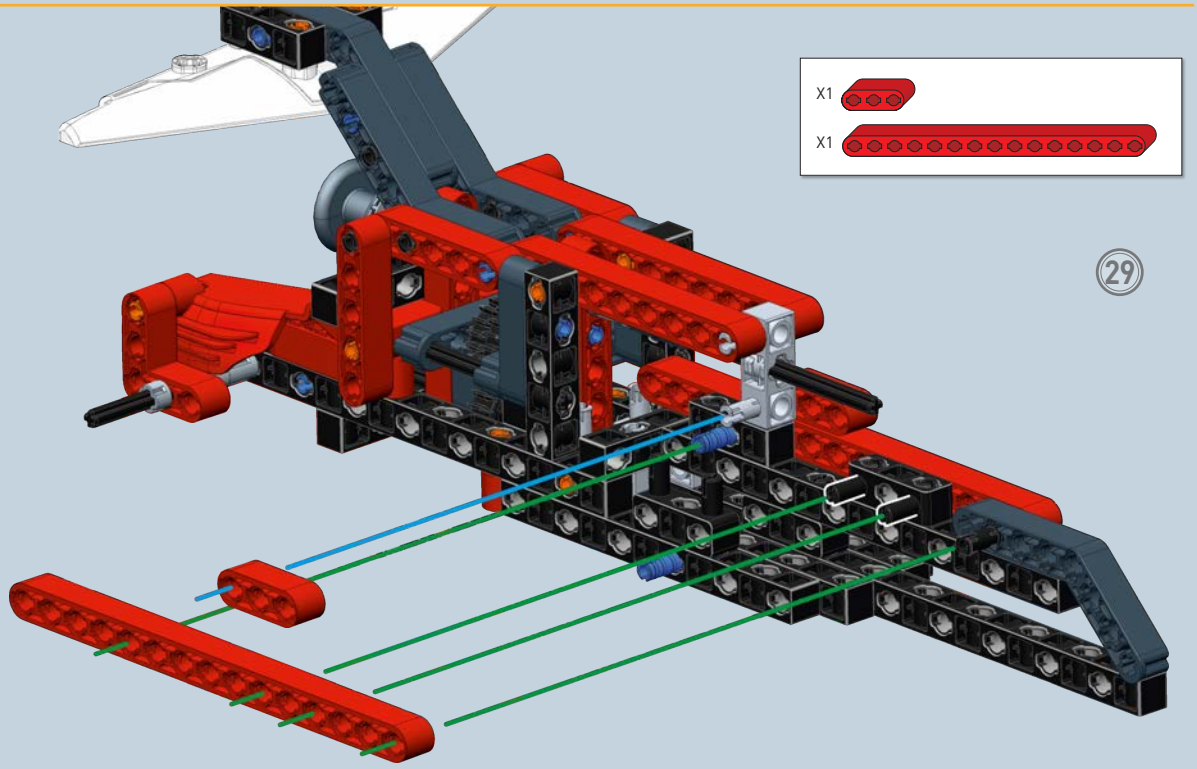
X1
X1
29

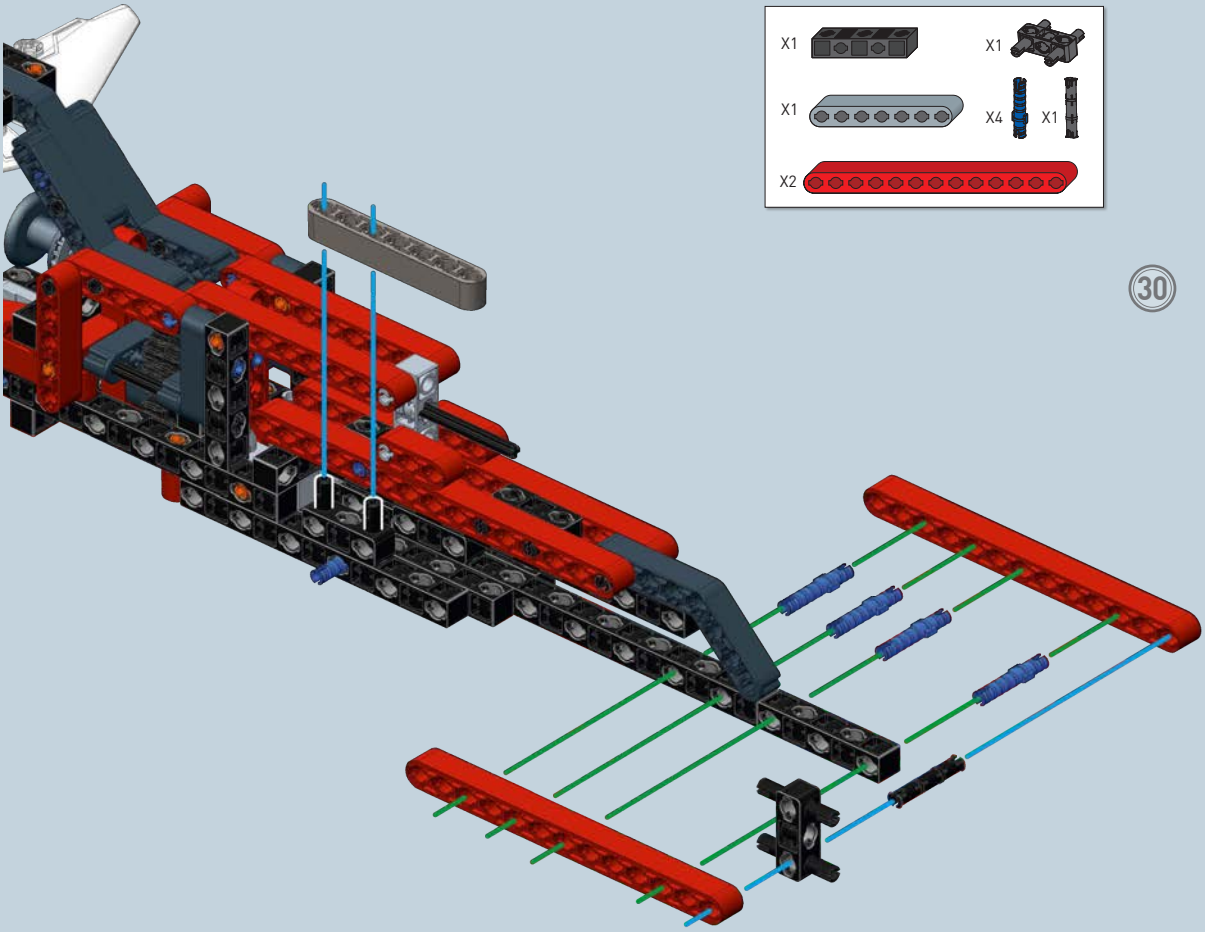
X1
X1
X1
X4
X1
X2
30

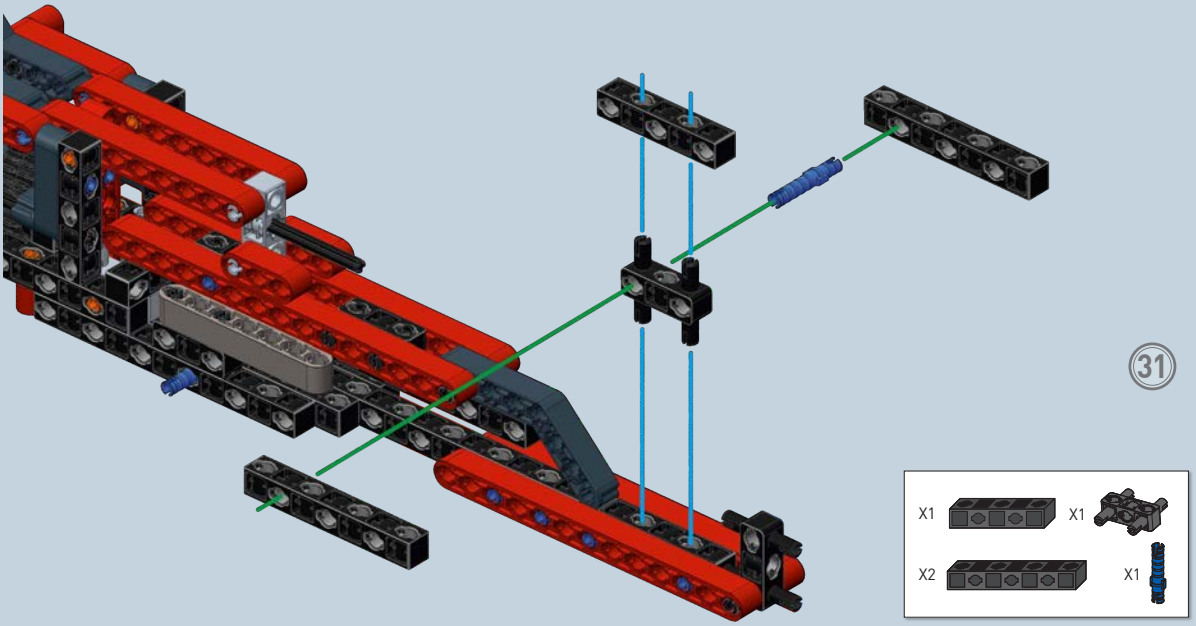
31
X1
X1
X2
X1

32

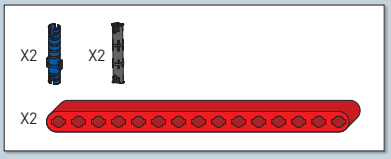

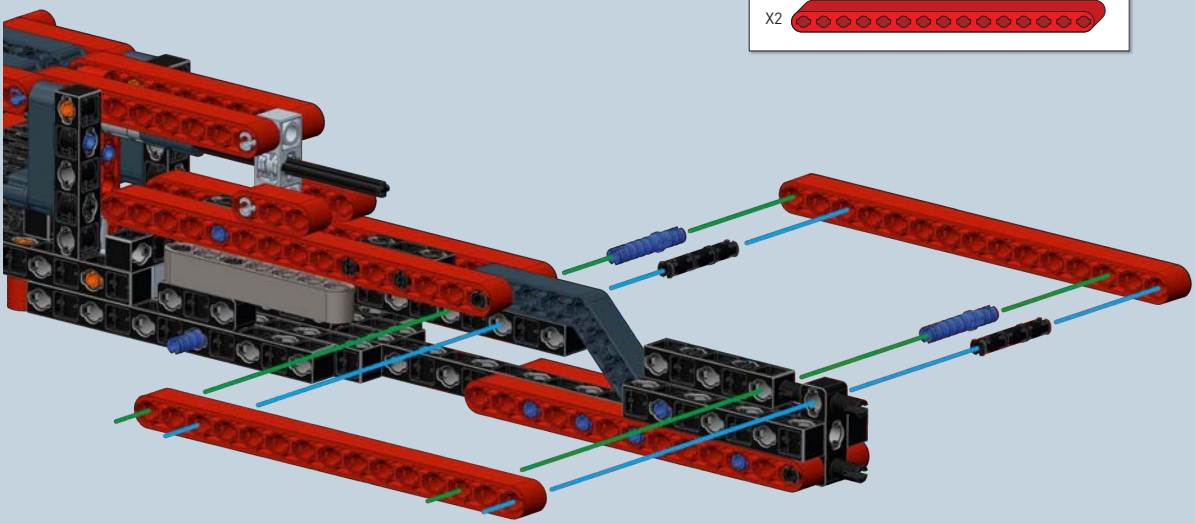

33

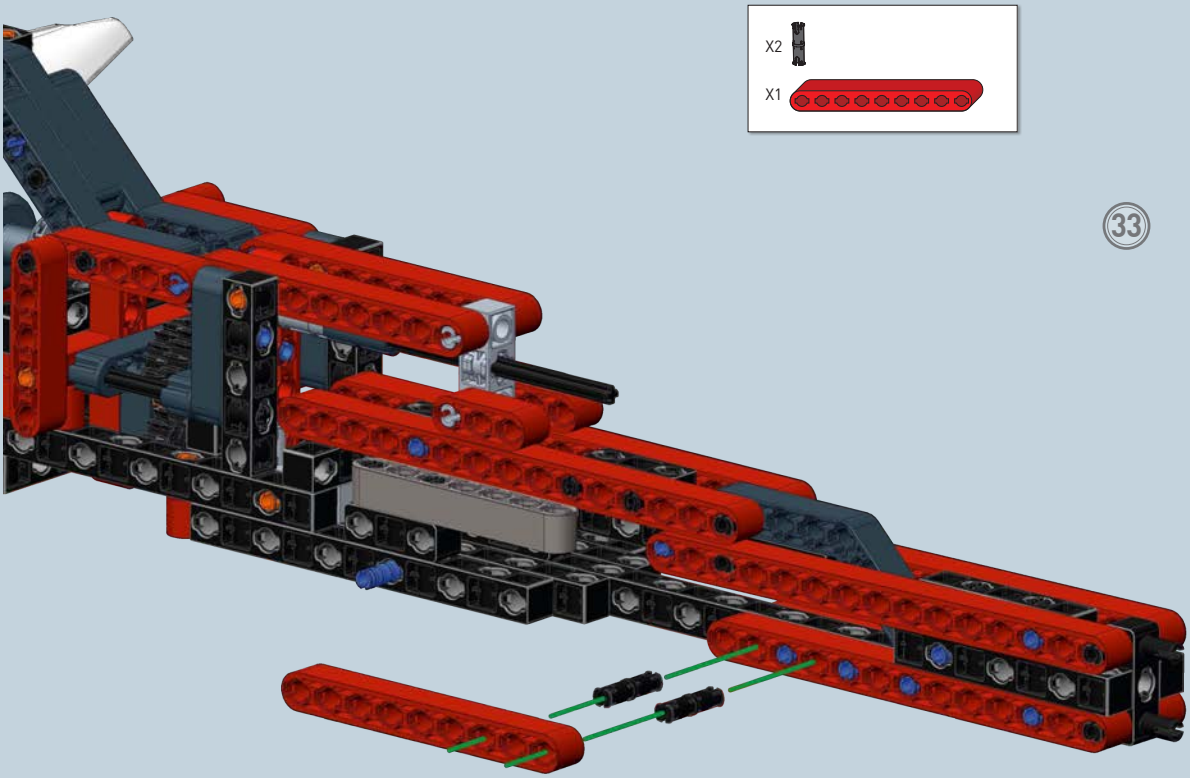

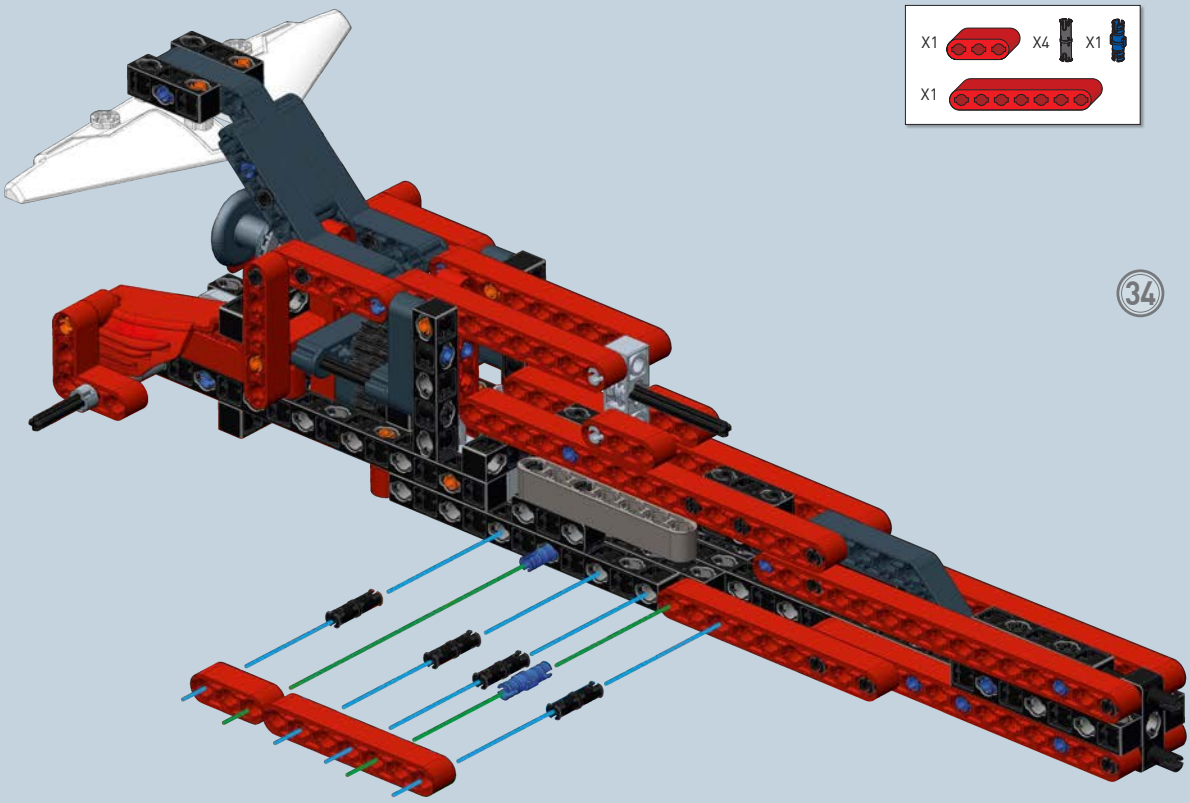
X1
X4
X1
X1
34

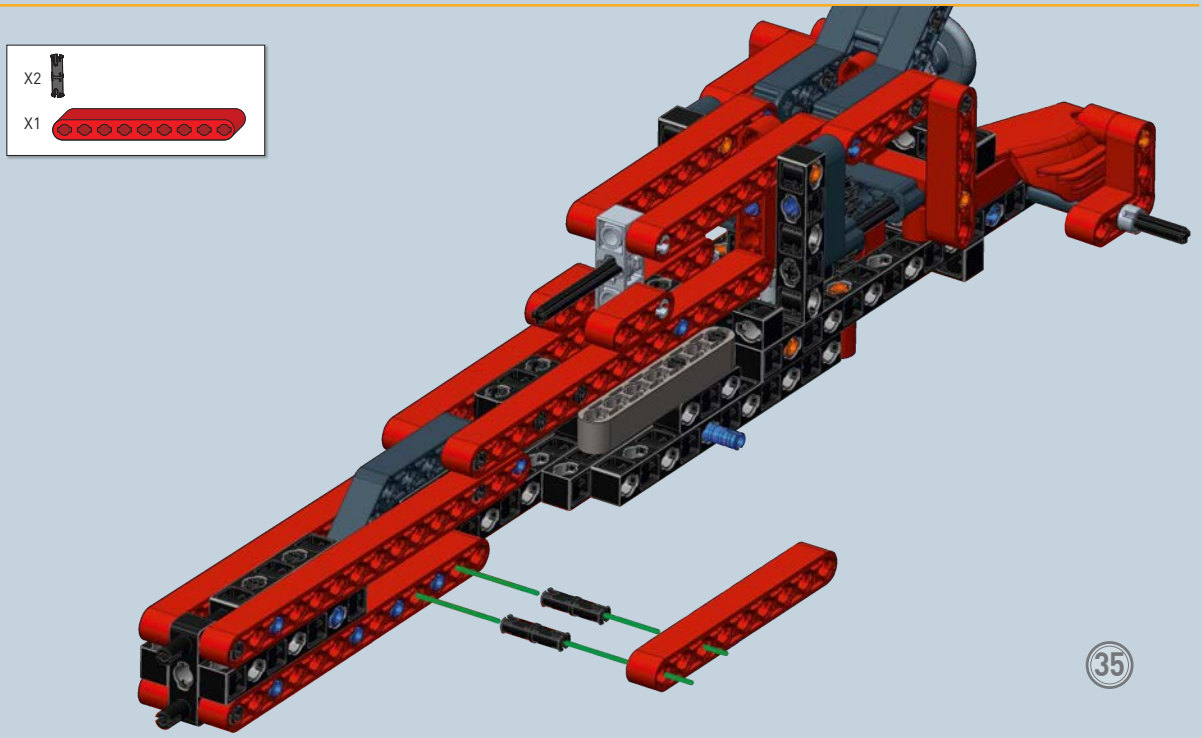
X2
X1
35

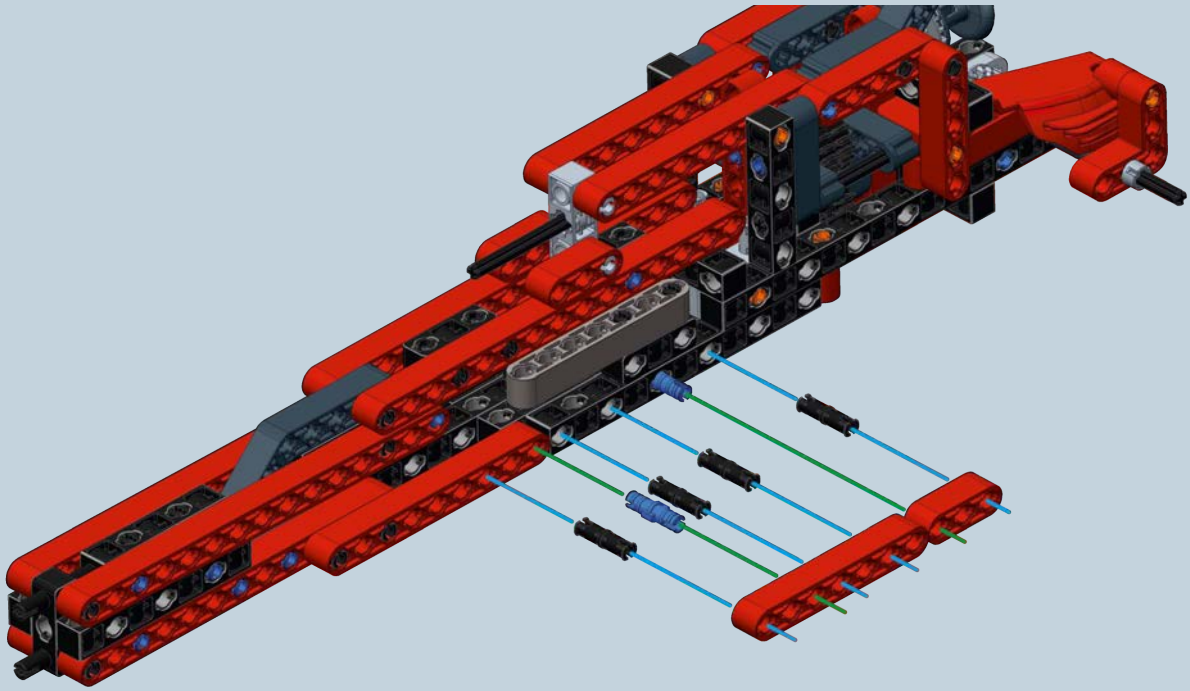

36

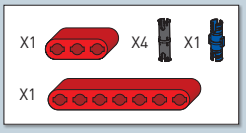

37

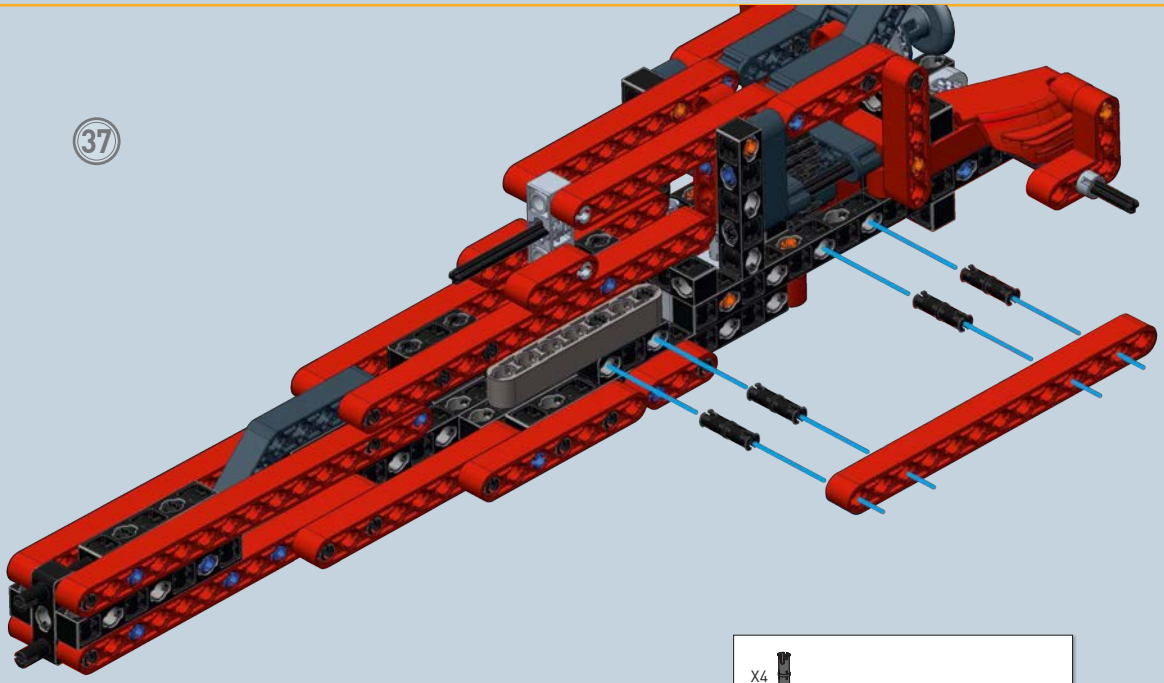

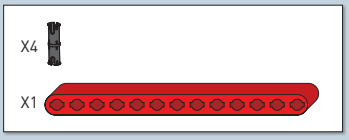

38

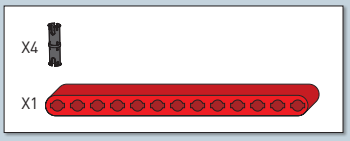

39

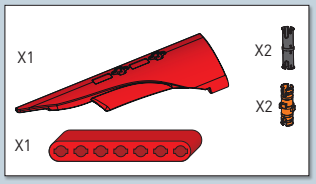

40

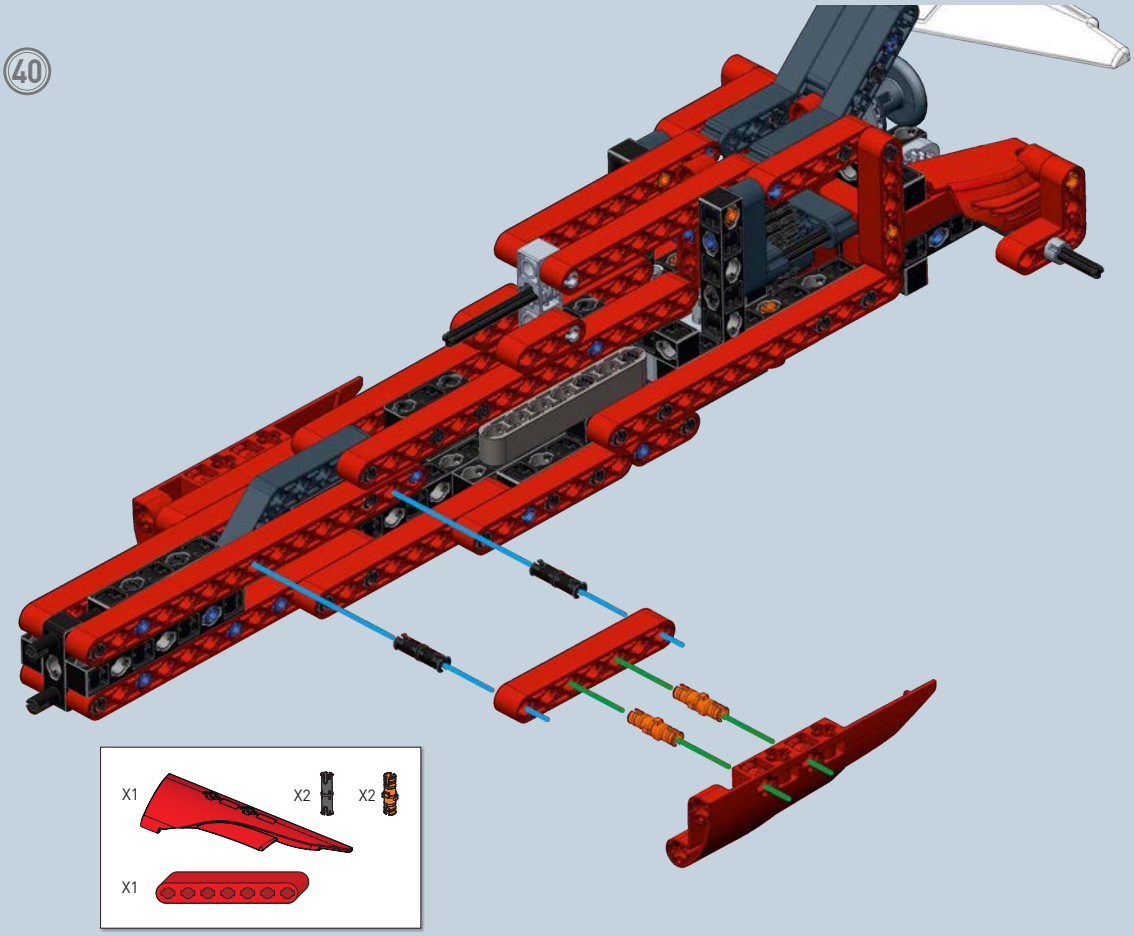

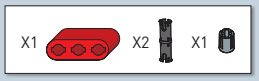

41

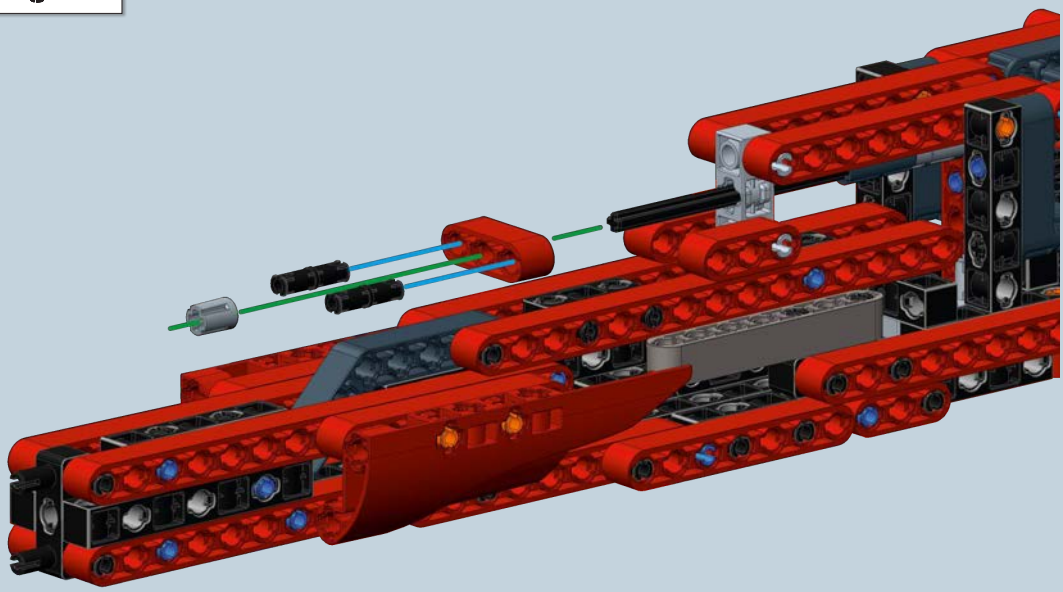

42

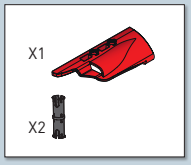

12

43

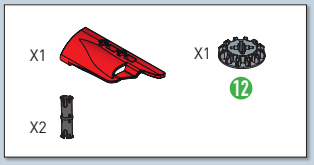

44

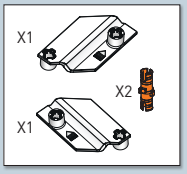

45

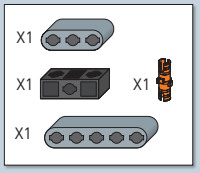

46

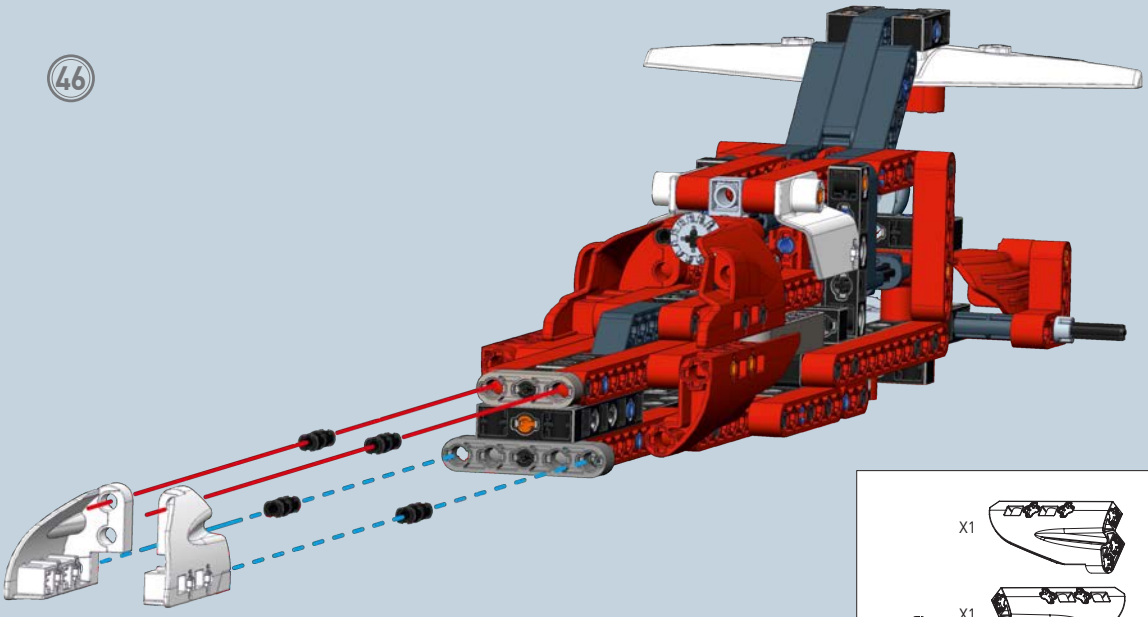

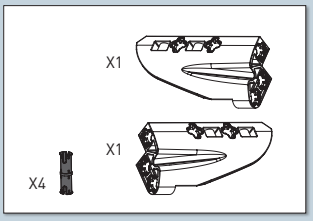

47

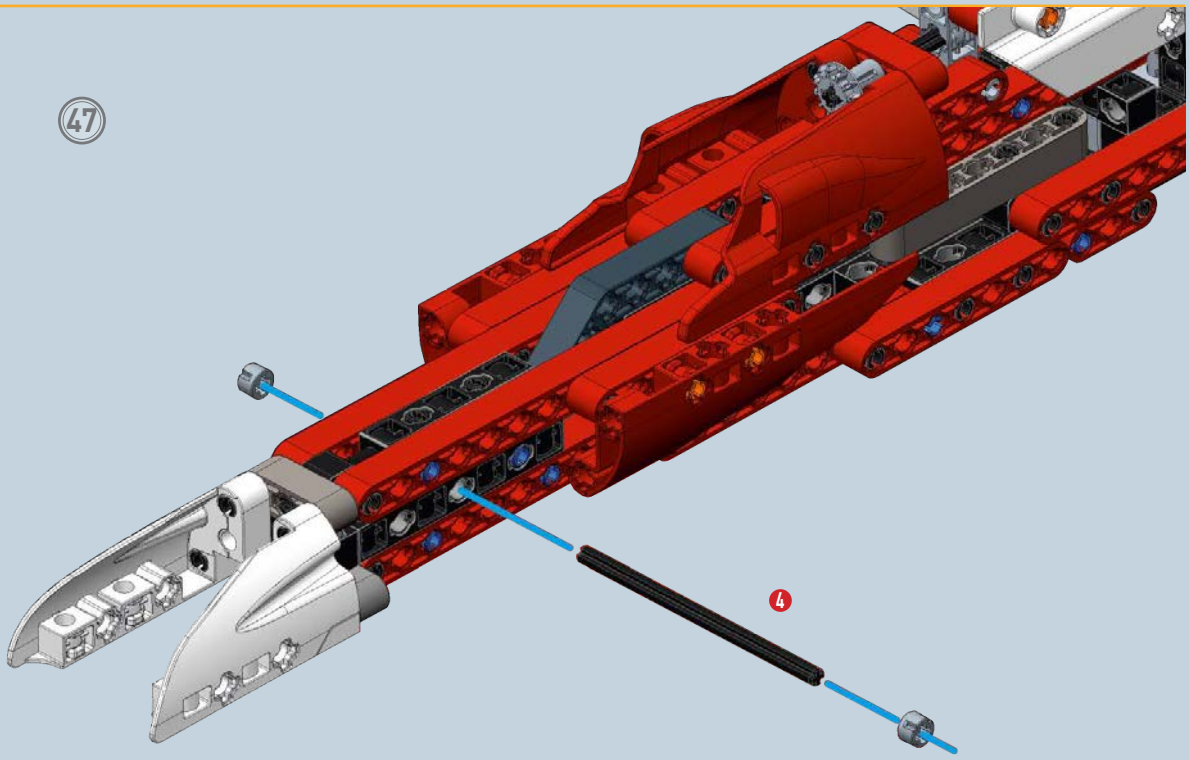

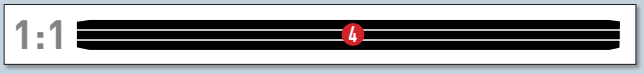

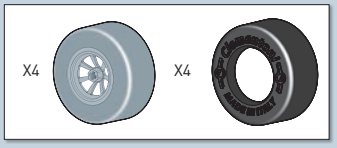

48

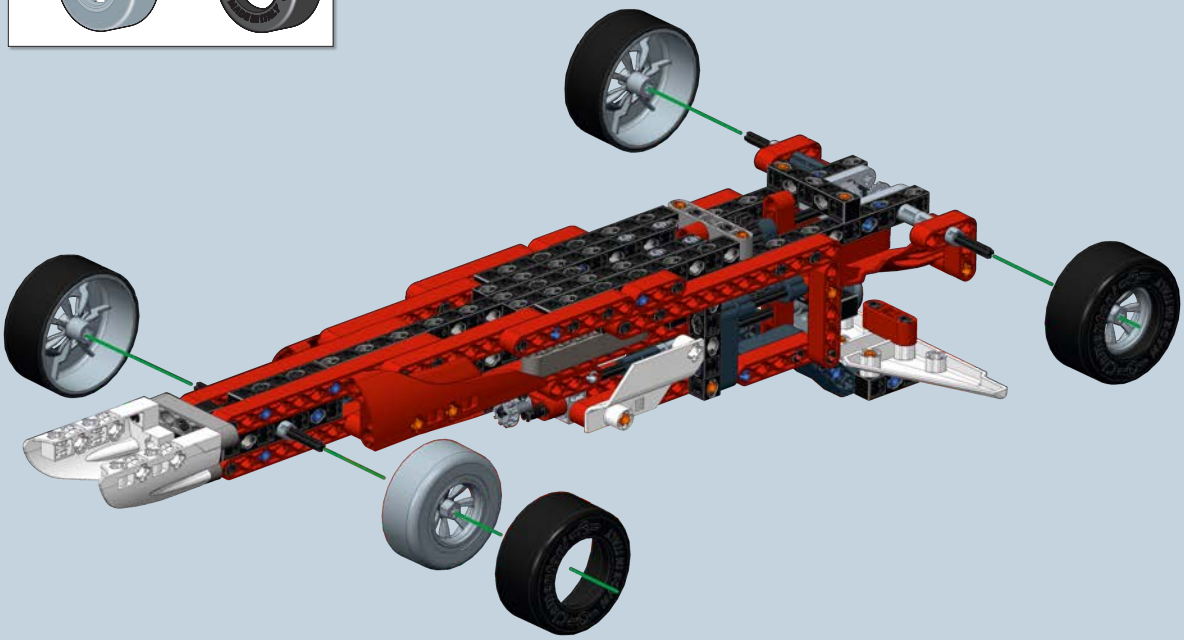

Modello finale