V36082

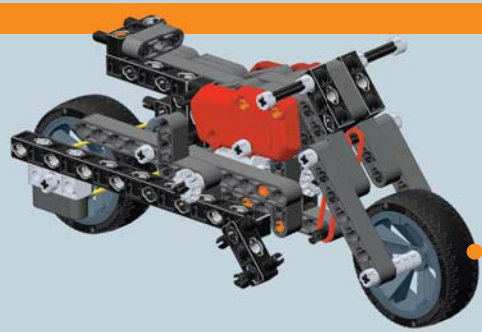

1

1

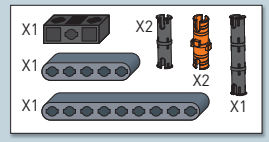

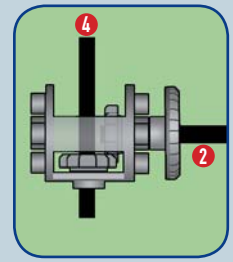

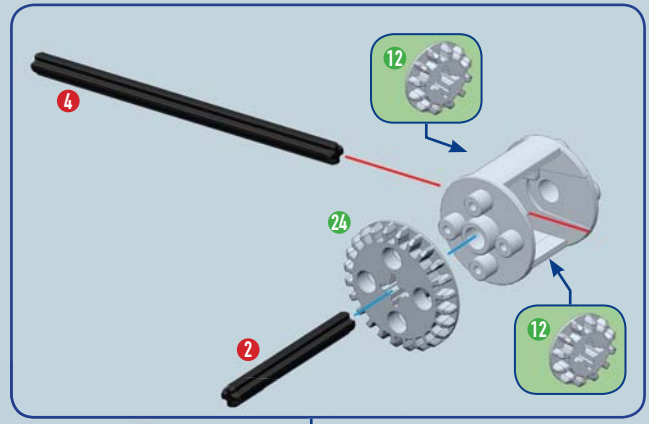

2

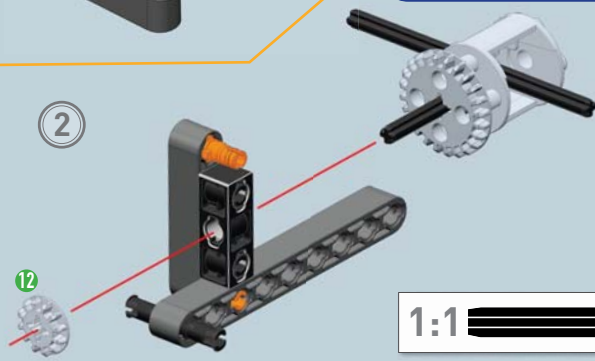

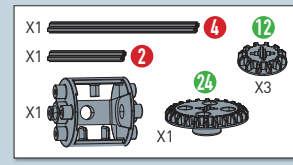

Read and keep these instructions for future reference.

Clementoni S.p.A.
Zona Industriale Fontenoce s.n.c.
62019 Recanati (MC) Italy

Tel.: +39 071 75811
Fax: +39 071 7581234
www.clementoni.com

V36082

Clementoni

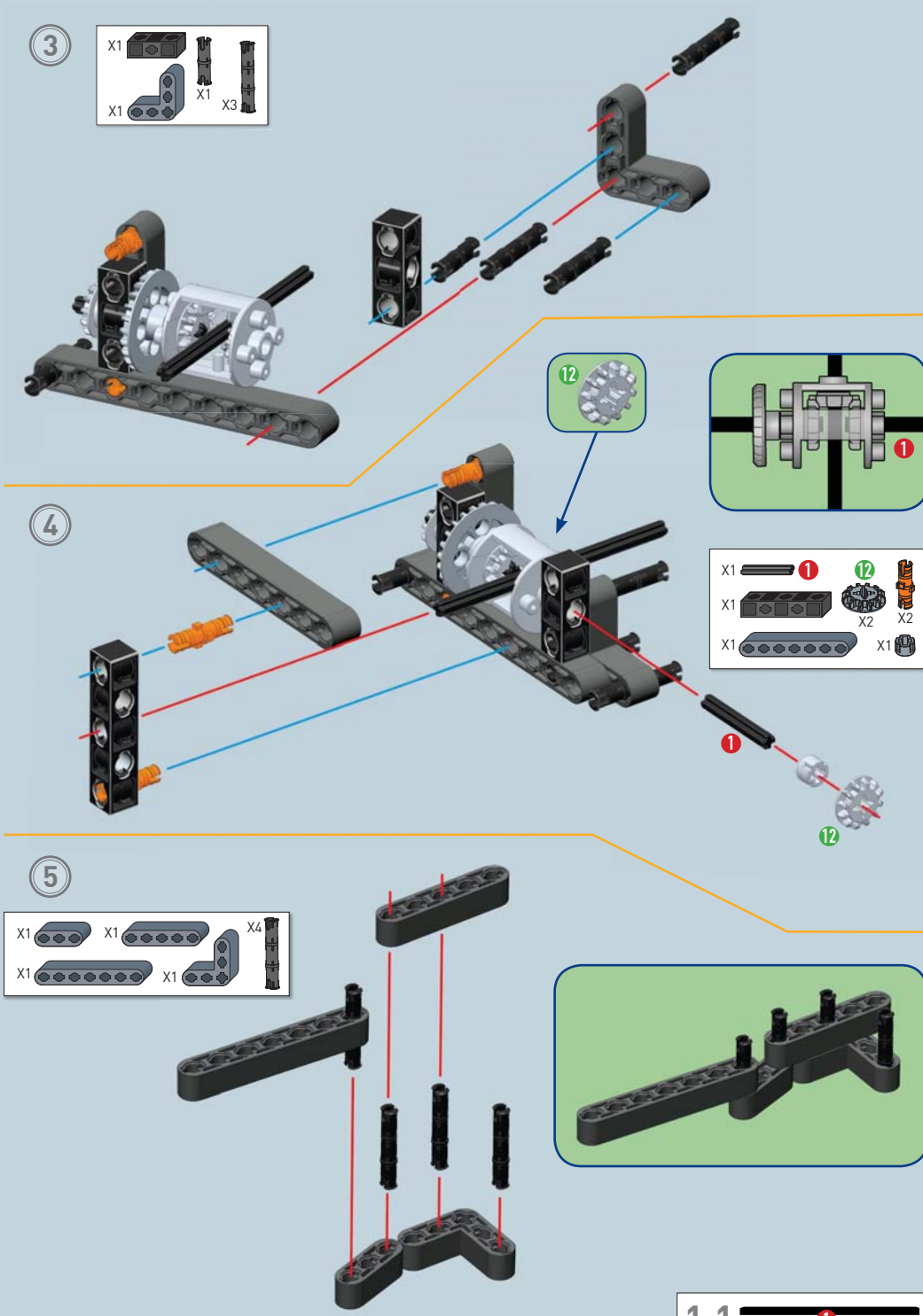
3
X1
X1
X1
X3
4
12
1
X1
1
12
X1
X2
X2
X1
X1
1
12
5
X1
X1
X4
X1
X1
1:1
1

6

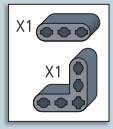

7

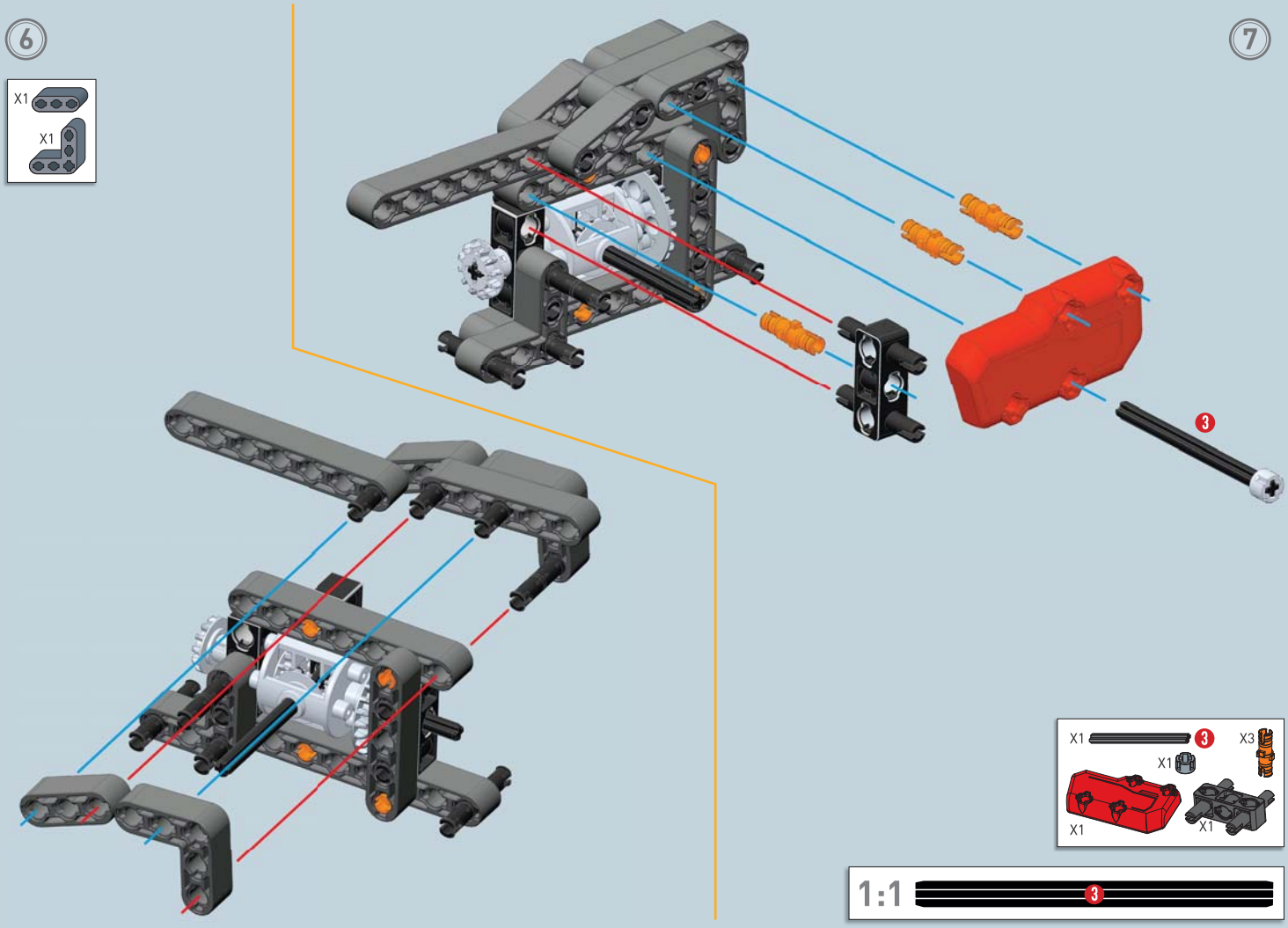

9

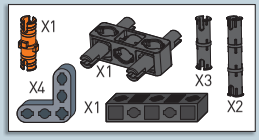

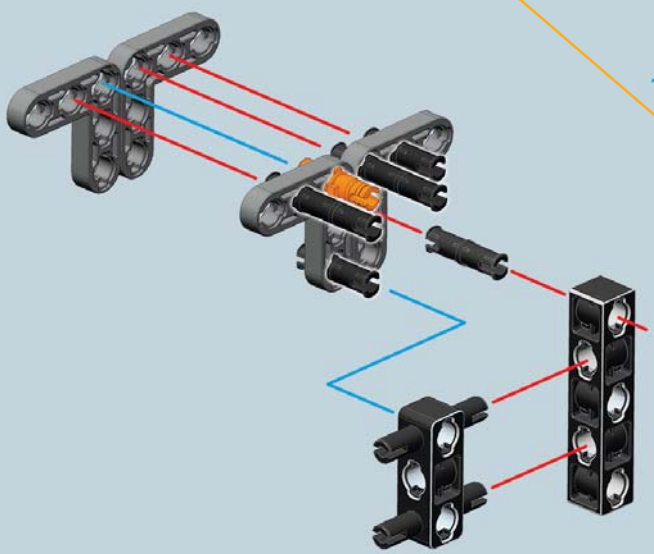

8

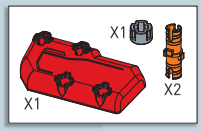

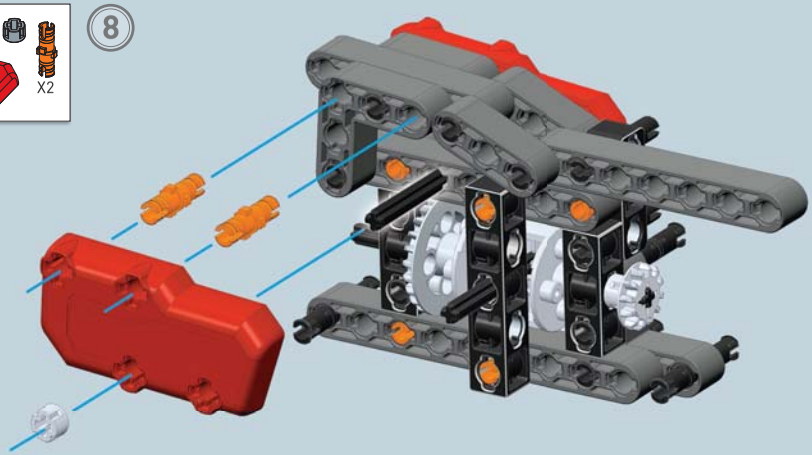

10

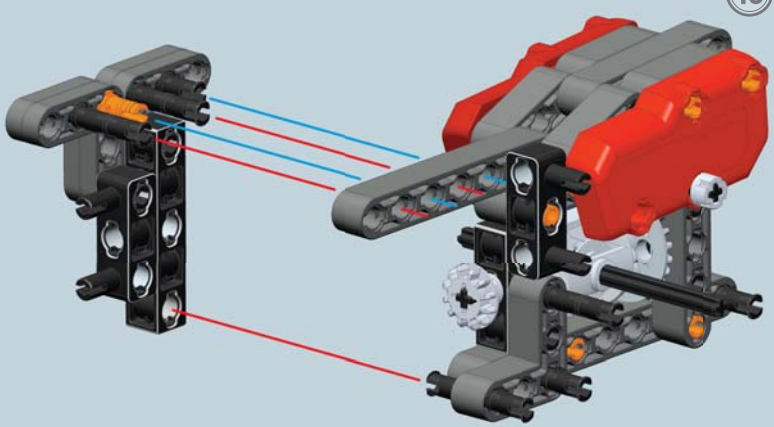

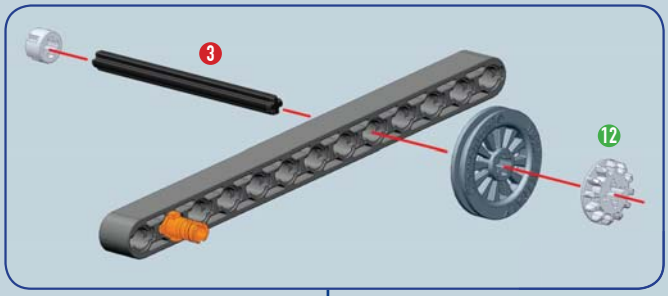

11

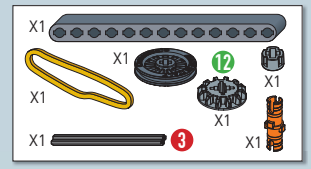

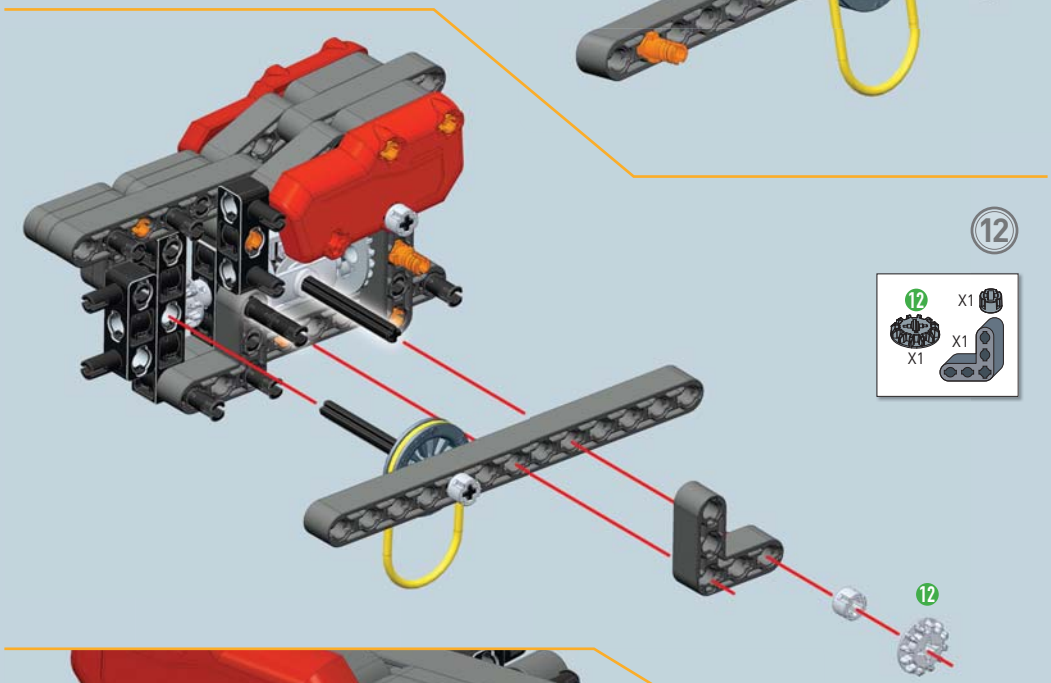

12

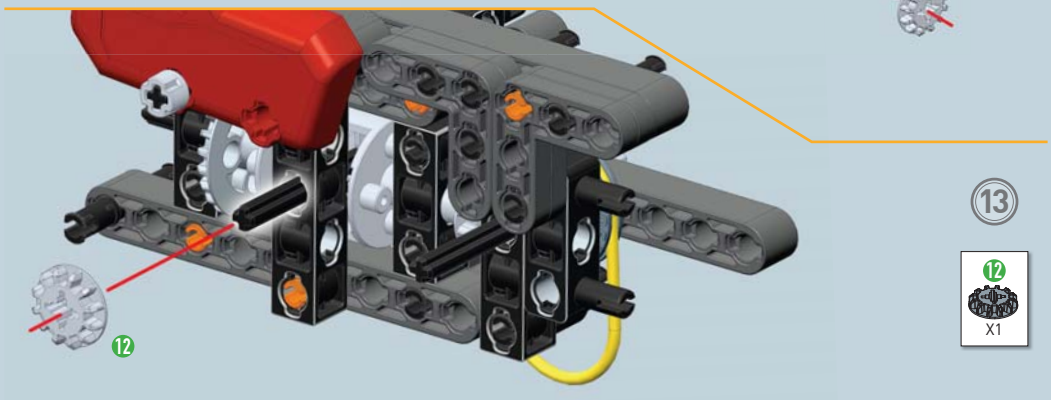

13

1:1

15

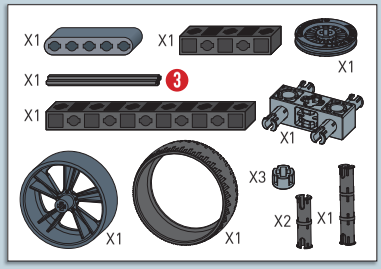

14

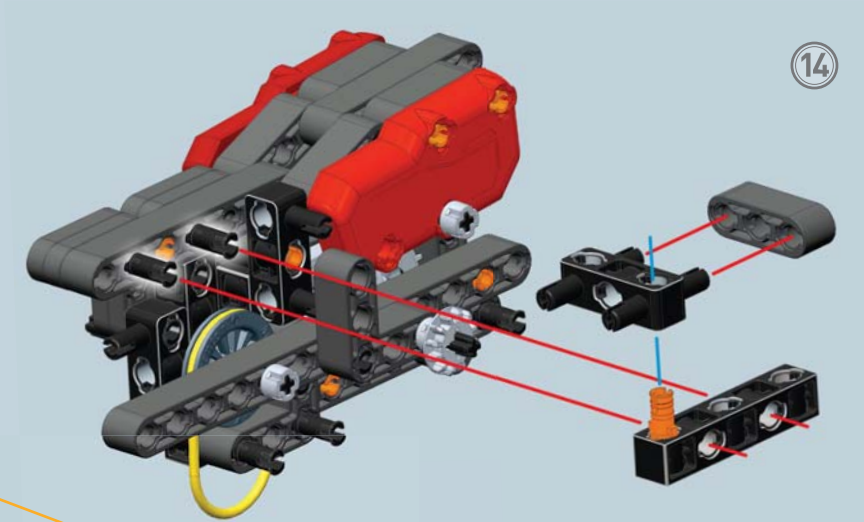

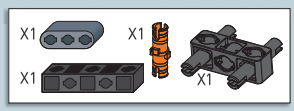

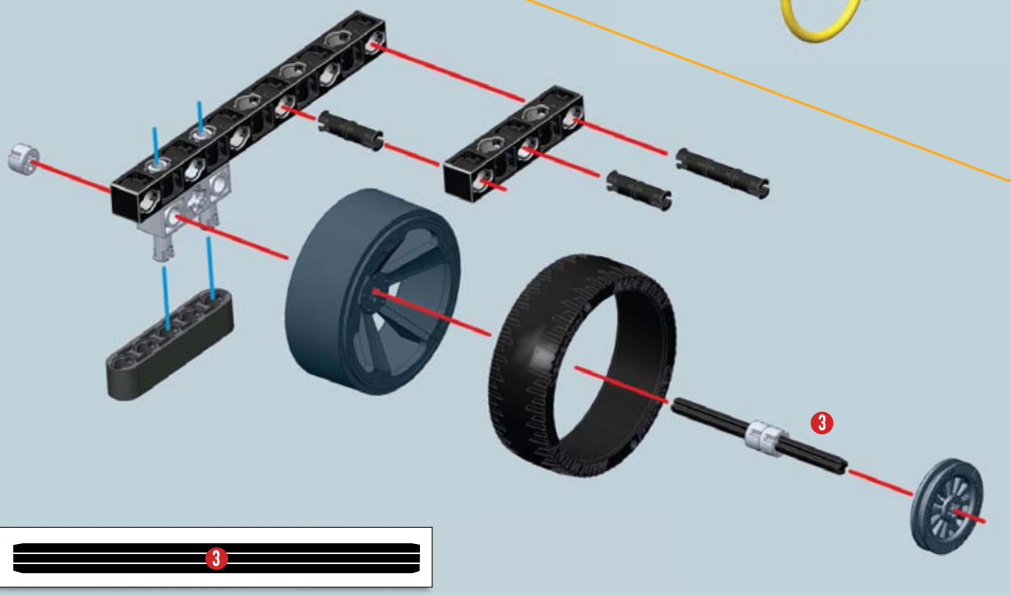

1:1 3

16

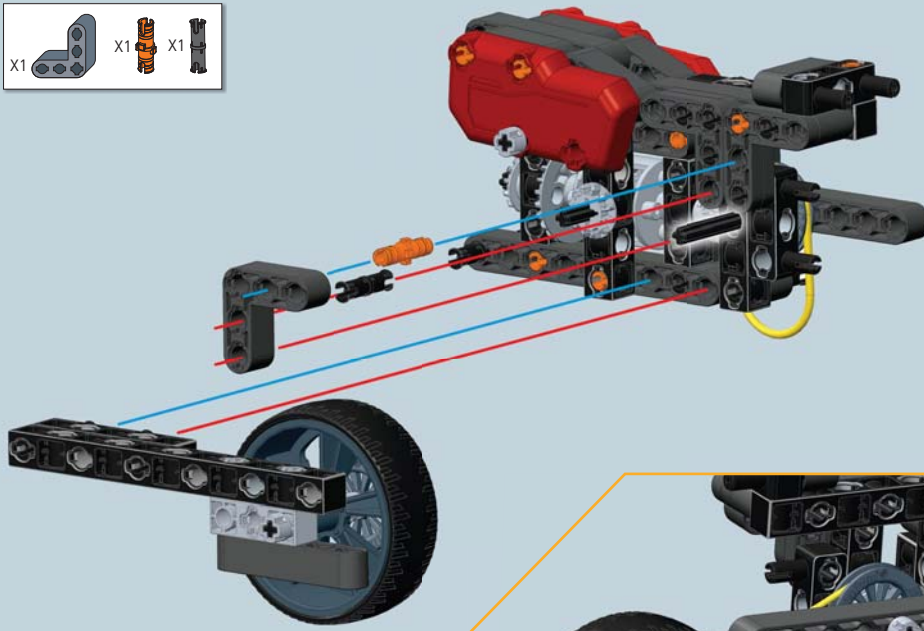

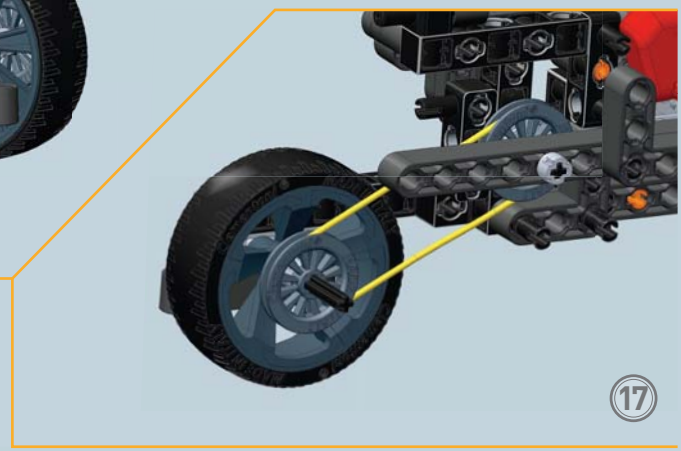

17

18

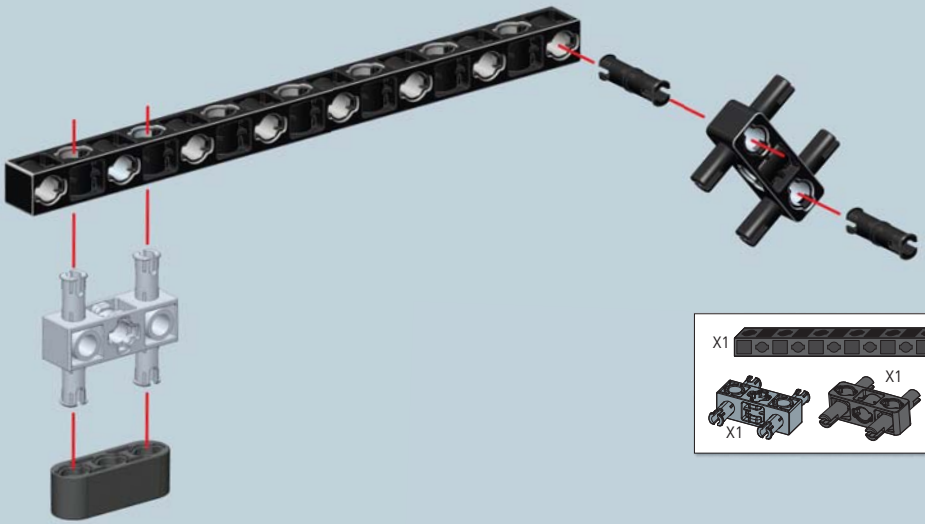

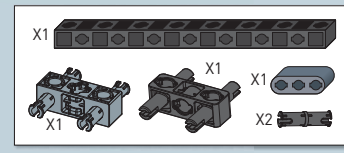

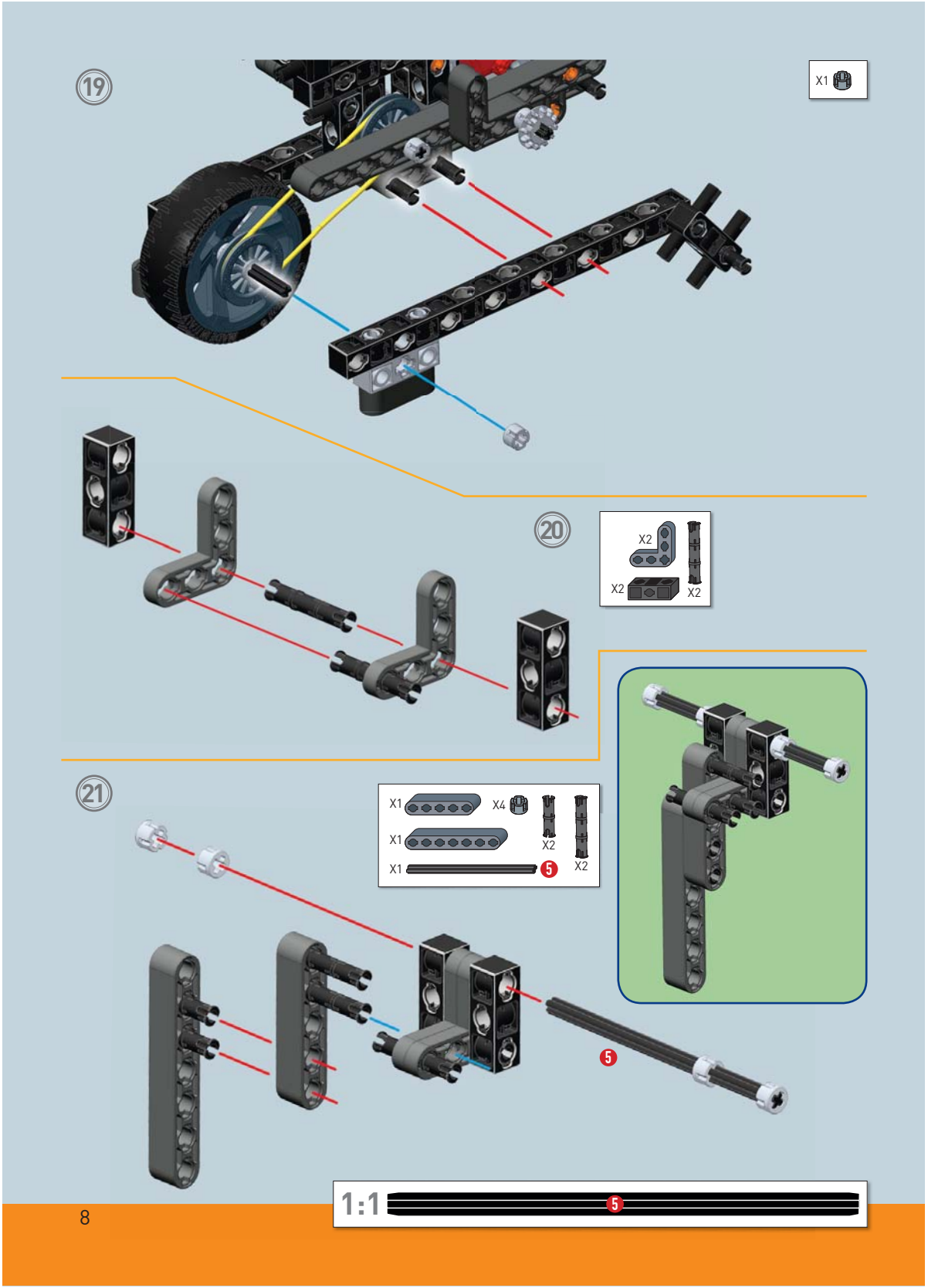
19
X1
20
X2
X2
X2
21
X1
X4
X1
X2
X1
5
X2
5
1:1
5

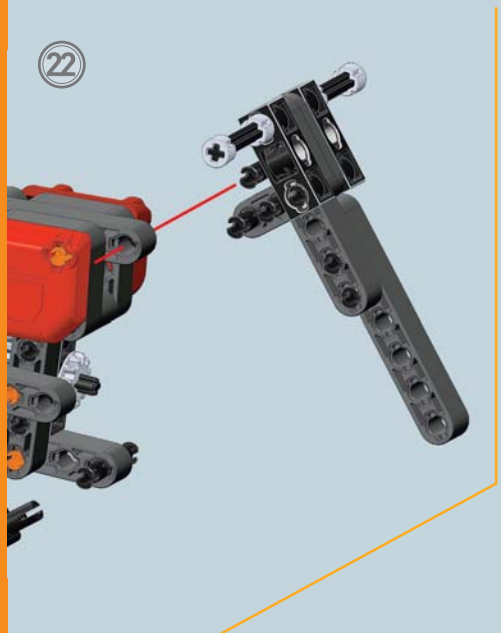
22

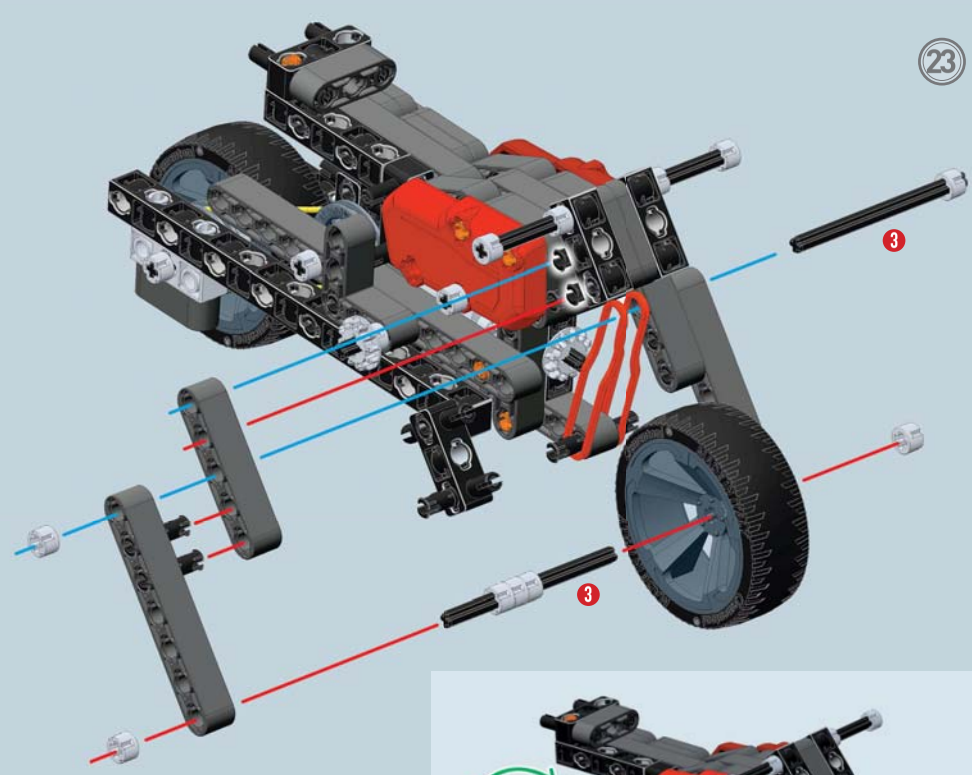
23
3
3

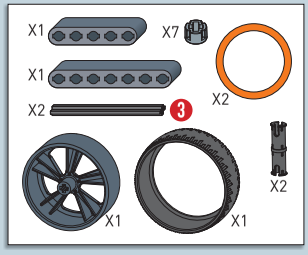
X1
X7
X1
X2
3
X2
X2
X1
X1

1:1
3

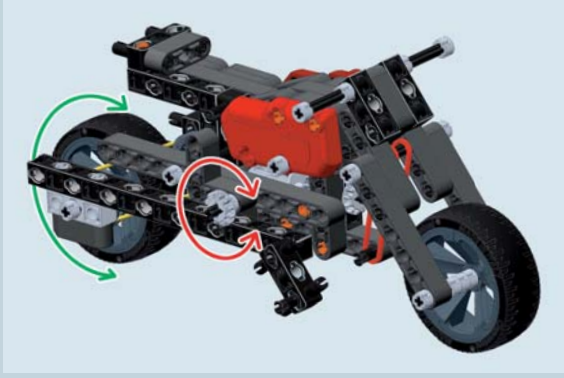

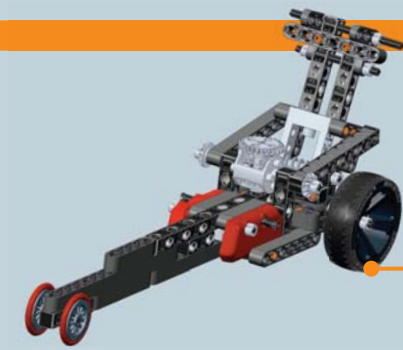

2

1

X1
X1
X2
X3

2

X2
X1
X1

3

X2
X2
X2

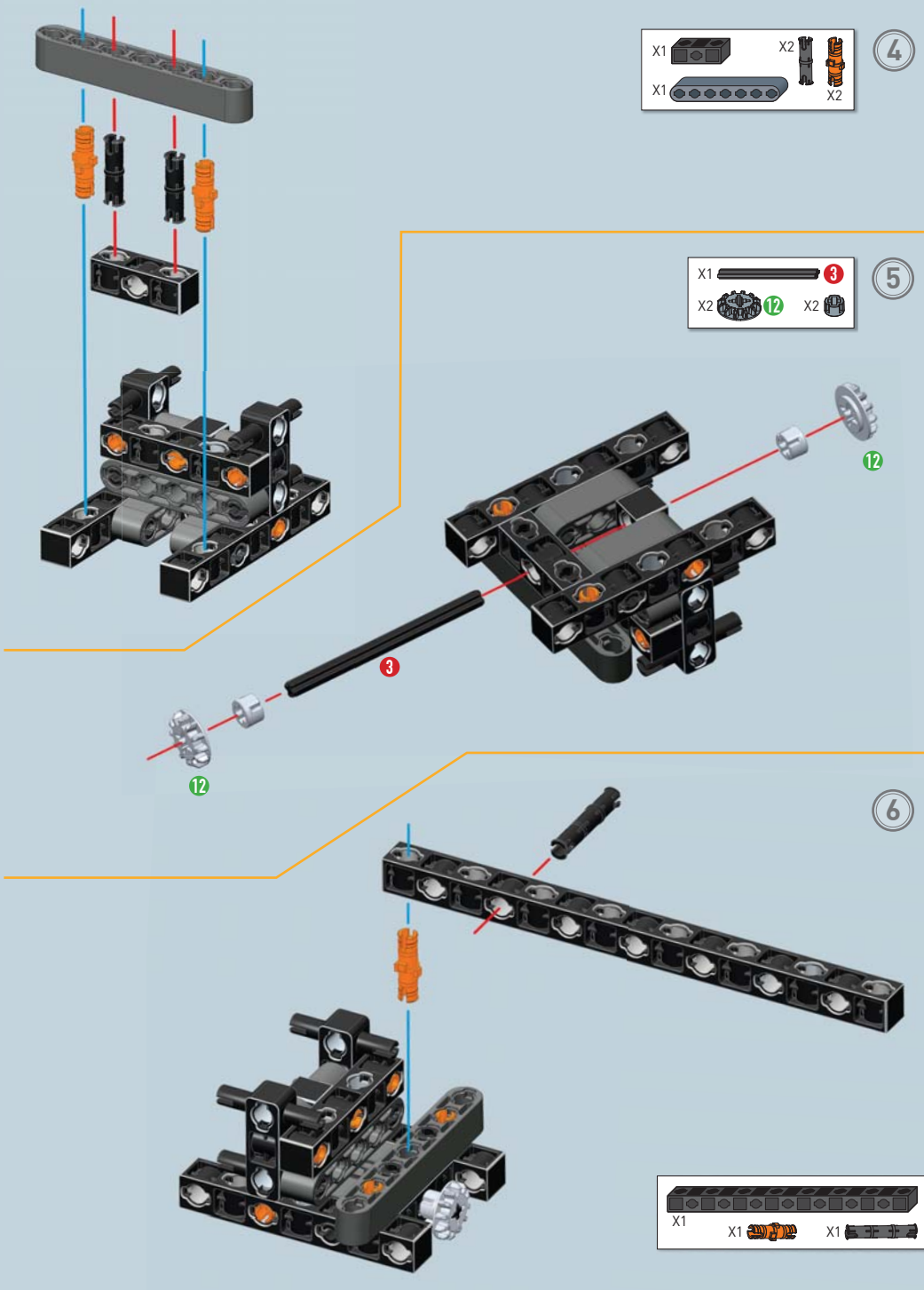

1:1 3

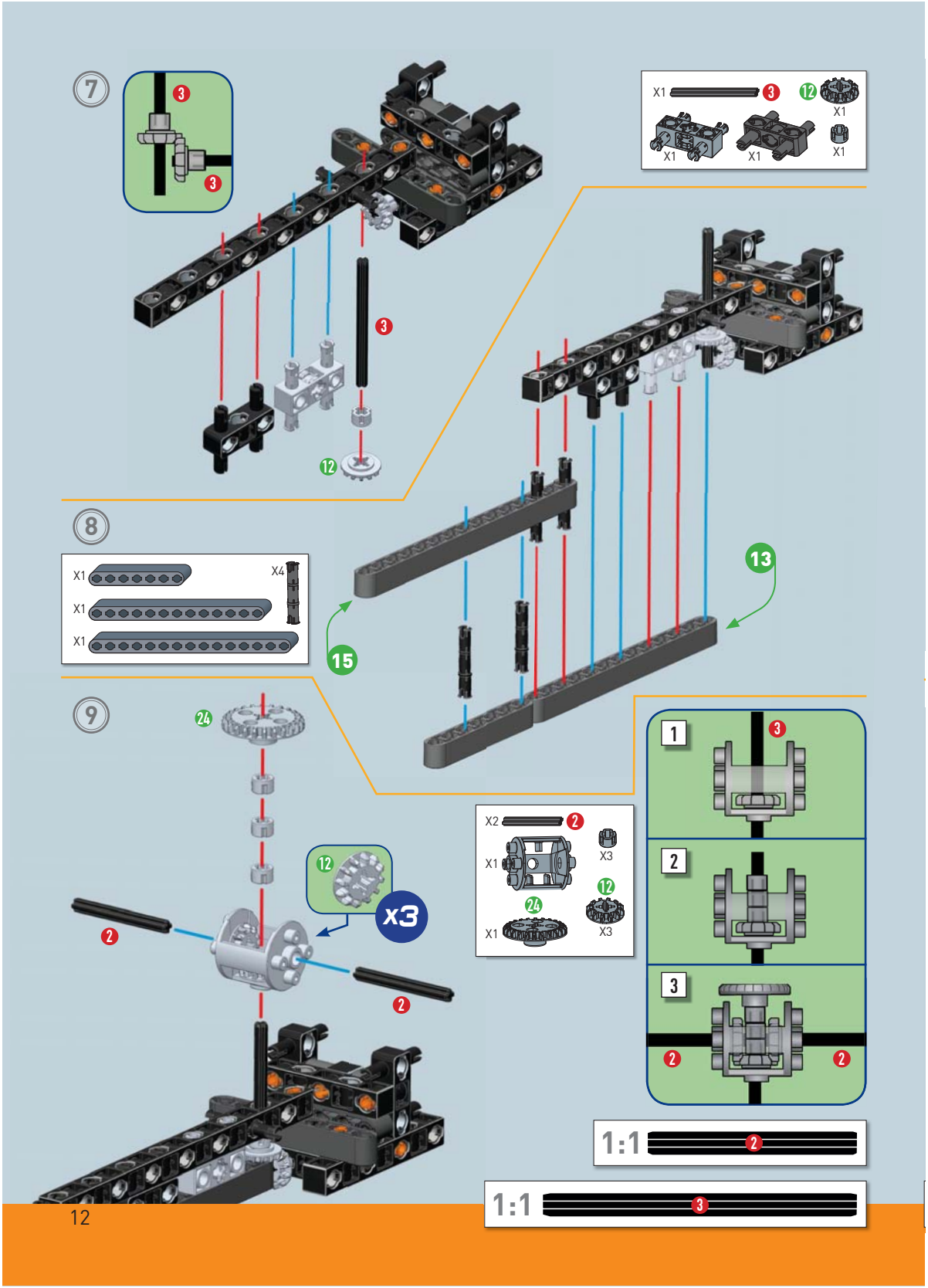
7
3
3
3
12
X1
3
12
X1
X1
X1
X1
8
X1
X4
X1
X1
15
13
9
24
12
x3
2
2
X2
2
X1
X3
12
24
X1
X3
1
3
2
3
2
2
1:1
2
1:1
3

10

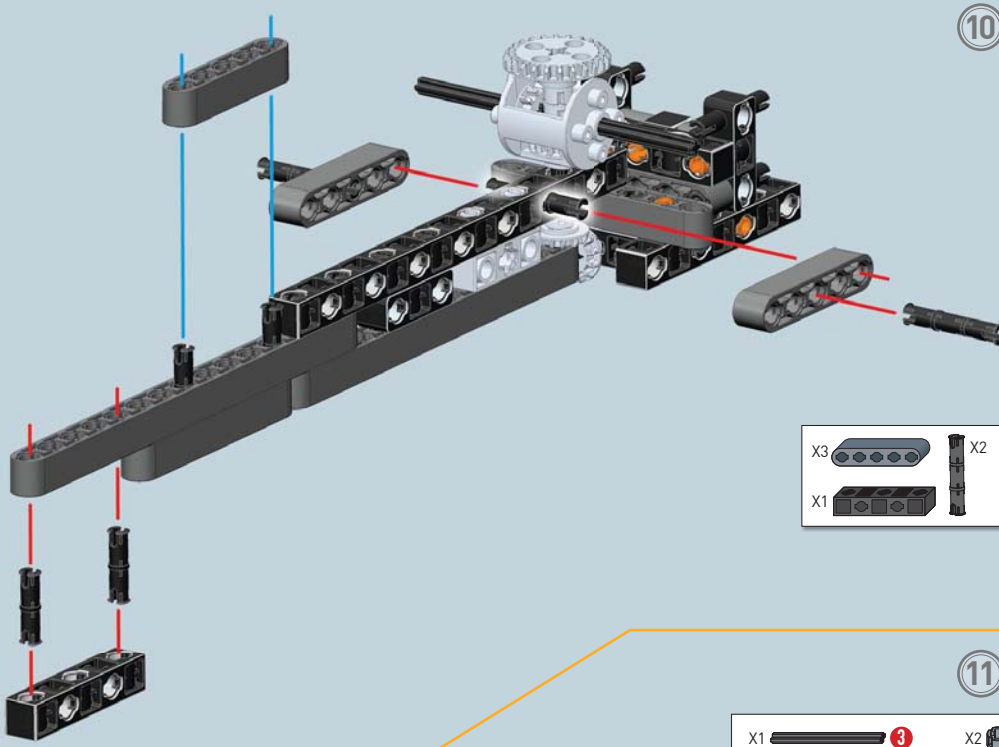

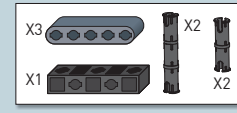

11

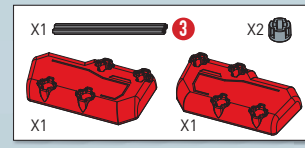

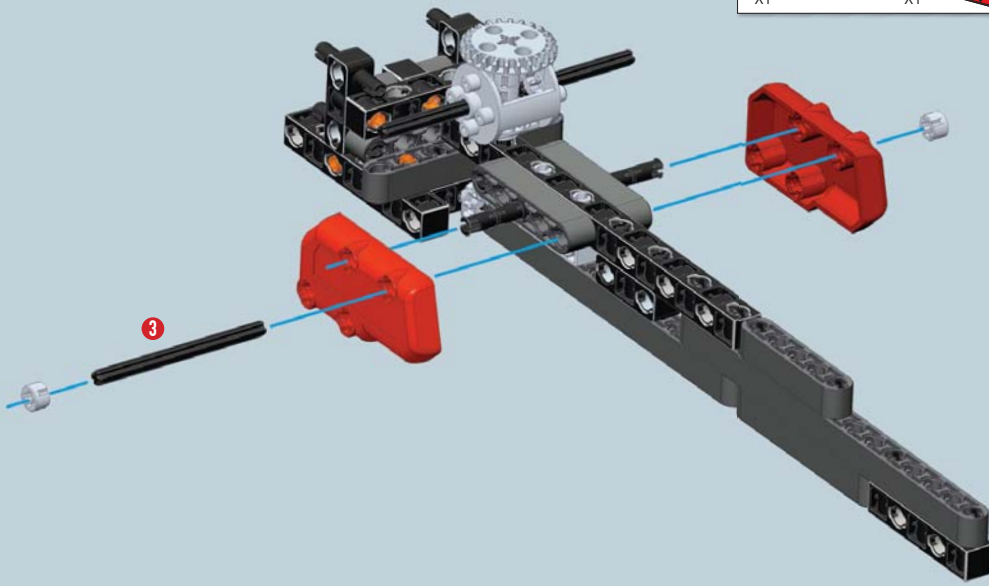

1:1 3

12

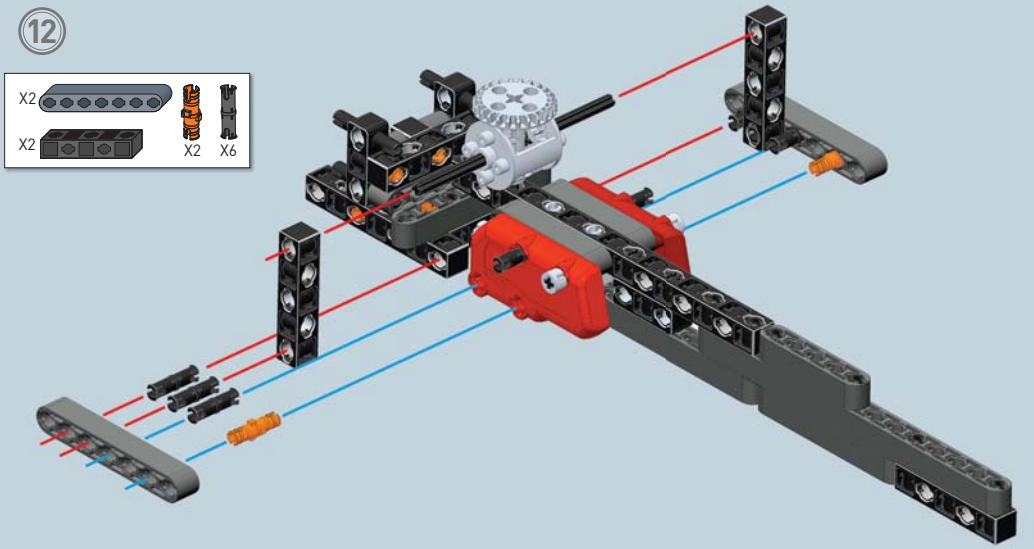

13

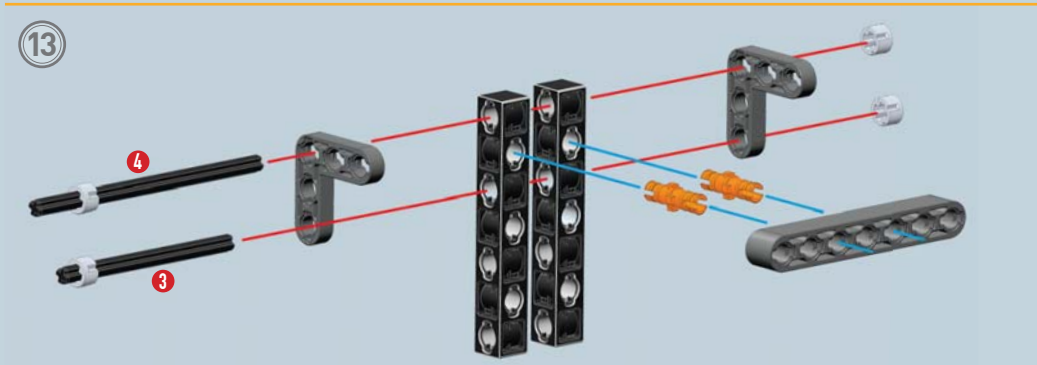

14

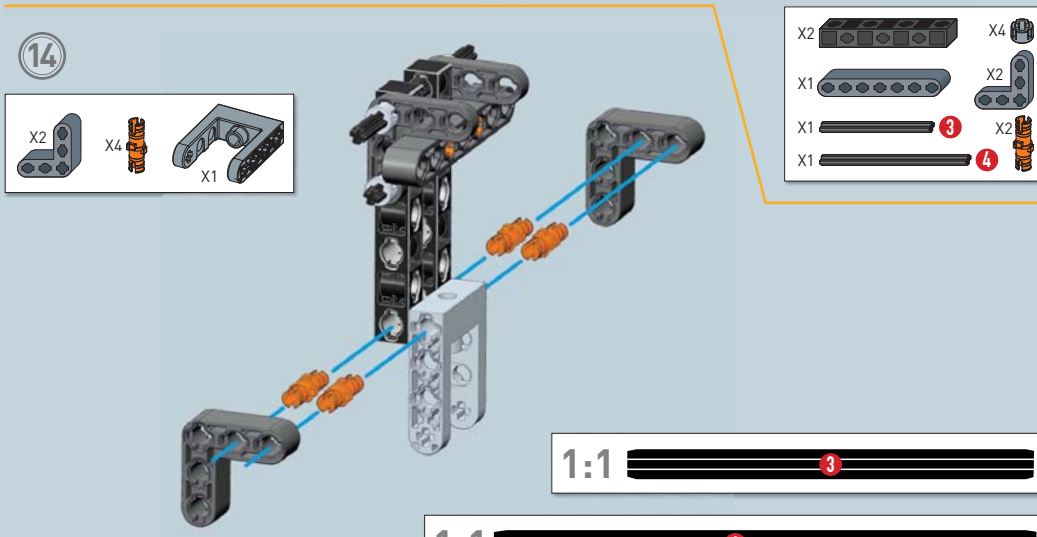

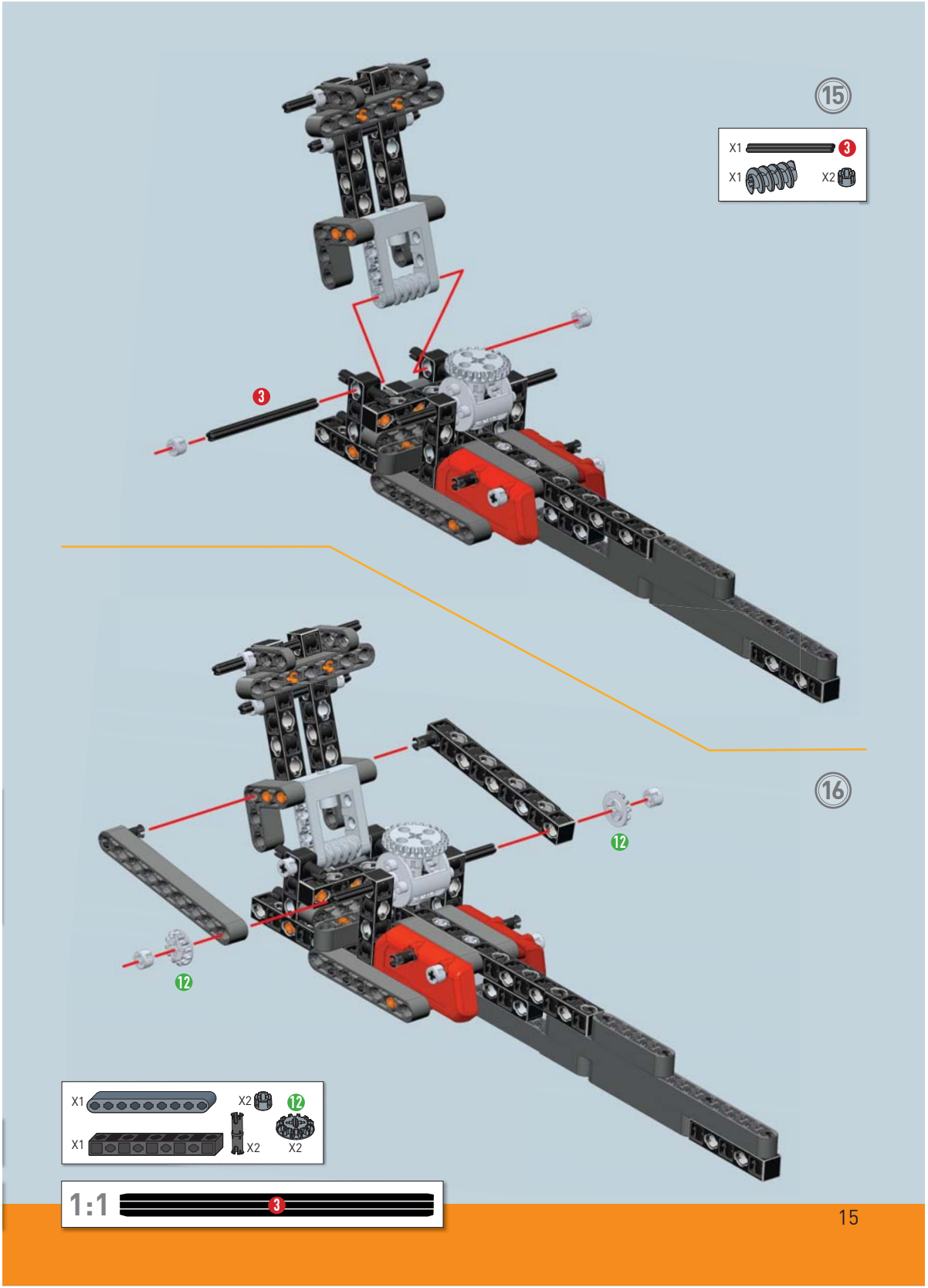
15
X1
3
X1
X2
3
16
12
12
X1
X2
12
X1
X2
X2
1:1
3
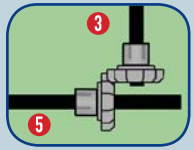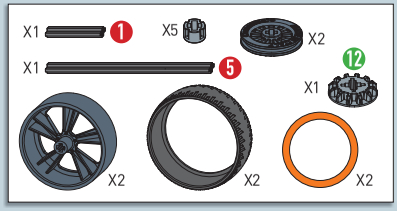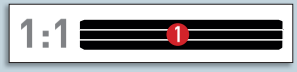
17